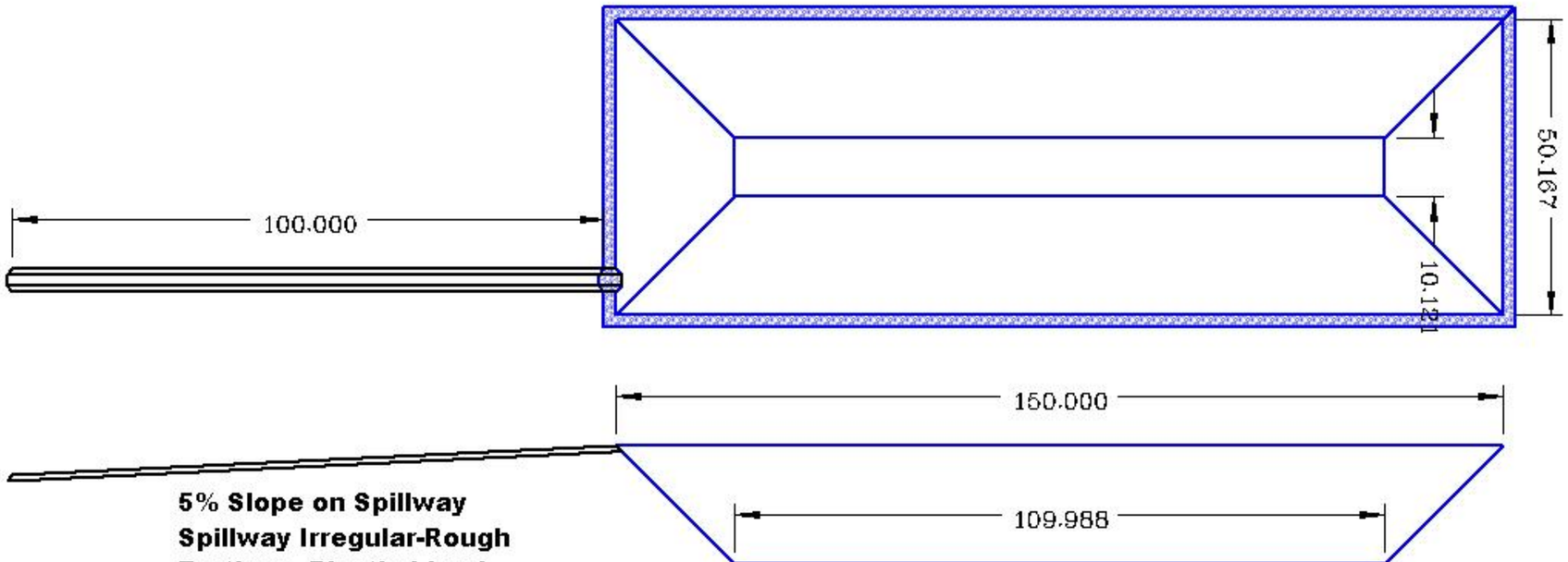

Plastic Lined Pond
Plastic Keyed into Earth
Plastic from Pond to Spillway Welded

Spillway Design
1 Foot of Free Board on Pond
Trapazoidal Shape
1:1 Side Slopes
2 Foot Base
1 Foot Deep

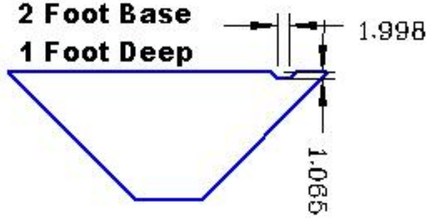

5% Slope on Spillway
Spillway Irregular-Rough
Earthen - Plastic Lined
Plastic Keyed into Earth

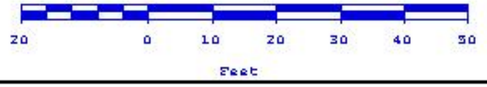

Elkhorn Goldfields Inc.

Surge Pond & Spillway Design

Map 4

Scale:	
Date:	15-Mar-2007
Project:	
Drawn By:	SEParrow
Checked:	
Approved:	
Drawing No.	PLTMAP4.plot