Quality Assurance Project Plan

for

Data Collection for Physical, Chemical, and Biological Characterizations of the Powder River, Tongue River, and Rosebud Creek TMDL Planning Areas

EPA Contract No. 68-C-01-022
Work Assignment No. 1-02

Prepared for:

Julie DalSoglio
U.S. Environmental Protection Agency
Region 8, Montana Operations Office
10 West 15th Street, Suite 3200
Helena, MT 59626

Prepared by:

Tetra Tech, Inc.
10306 Eaton Place, Suite 340
Fairfax, VA 22030

May 27, 2003
Revision 0

This quality assurance project plan (QAPP) has been prepared according to guidance provided in *EPA Requirements for Quality Assurance Project Plans* (EPA QA/R-5, EPA/240/B-01/003, U.S. Environmental Protection Agency, Quality Assurance Division, Washington, DC, March 2001) to ensure that environmental and related data collected, compiled, and/or generated for this project are complete, accurate, and of the type, quantity, and quality required for their intended use. Tetra Tech will conduct work in conformance with the quality assurance program described in the quality management plan for Tetra Tech's Fairfax Group and with the procedures detailed in this QAPP.

Approvals:

Kevin Kratt Work Assignment Leader Tetra Tech, Inc.	Date	Esther C. Peters, Ph.D. Quality Assurance Officer Tetra Tech, Inc.	Date
James Stribling, Ph.D. Laboratory Manager, Tetra Tech, Inc. Biological Research Facility	Date	Joe Faubion Field Project Manager Tetra Tech EM, Inc.	Date

Approvals, continued:

Kathy Smit Laboratory Manager Northern Analytical Laboratories, Inc.	Date	Denise Jensen Quality Assurance Coordinator Northern Analytical Laboratories, Inc.	Date
Julie DalSoglio Work Assignment Manager USEPA, Region 8, Montana Operations Office	Date	Tina Laidlaw Quality Assurance Manager USEPA, Region 8, Montana Operations Office	Date
Ron Steg Project Manager USEPA, Region 8, Montana Operations Office	Date	Tony Medrano Quality Assurance Manager USEPA, Region 8, Denver Office	Date
Russell Kinerson Project Officer USEPA, Office of Science and Technology	Date	Robert Shippen Quality Assurance Coordinator USEPA, Office of Science and Technology	Date

William Telliard
Quality Assurance Officer
USEPA, Office of Science and Technology

Date

CONTENTS

Tables v
Figures v
Acronyms vi
Distribution vii
Project Management
1.0 Project/Task Organization 1
2.0 Problem Definition/Background 6
3.0 Project/Task Description 6
4.0 Data Quality Objectives and Criteria 13
5.0 Special Training Requirements/Certification 18
Data Acquisition
6.0 Documentation and Records 20
7.0 Sampling Design 22
8.0 Sampling Methods 23
9.0 Sample Handling and Custody 23
10.0 Analytical Methods 25
11.0 Quality Control 26
12.0 Instrument/Equipment Testing, Inspection, and Maintenance 31
13.0 Instrument Calibration and Frequency 31
14.0 Inspection/Acceptance of Supplies and Consumables 32
15.0 Nondirect Measurements 32
16.0 Data Management 32
Assessment/Oversight
17.0 Assessment and Response Actions 33
18.0 Reports to Management 34
Data Validation and Usability
19.0 Data Review, Verification, and Validation 35
20.0 Verification and Validation Methods 35
21.0 Reconciliation with User Requirements 35

Appendices

A. Sampling and Analysis Plan

B. Montana DEQ Standard Operating Procedures (Sections 10 and 11)

C. Northern Analytical Laboratories (Chemistry) Standard Operating Procedures

D. Biological Sampling and Analysis Standard Operating Procedures

TABLES

1 General Schedule for TPA Monitoring Program Deliverables. 13
2. Examples of Some Environmental Data to Be Collected for This Project 15
3. A. Measurement Performance Criteria for Chemical Analyses 19
B. Measurement Performance Criteria for Biological Analyses 20
4. Laboratory Sample Collection Volumes and Containers for Freshwater Aqueous Samples 24
5 Sample Handling Requirements for Freshwater Aqueous Samples to Be Analyzed by the Laboratory 24
6. Study Target Analytes and Corresponding Analysis Methods 27

FIGURES

1. Project Organization 2

ACRONYMS

DEQ	Department of Environmental Quality (MDEQ)
DO	Dissolved oxygen
DQI	Data quality indicators
DQO	Data quality objectives
EC	Electrolytic conductivity
EMAP	EPA's Environmental Monitoring and Assessment Protocols
EPA	U.S. Environmental Protection Agency
HDPE	High-density polyethylene
MDEQ	Montana Department of Environmental Quality
PM	Project Manager
PO	Project Officer
PTFE	Polytetrafluoroethylene
QA	Quality assurance
QAM	Quality Assurance Manager
QAMP	Quality assurance management plan
QAO	Quality Assurance Officer
QAPP	Quality assurance project plan
QC	Quality control
RPD	Relative percent difference
RMSE	Root mean square error
RSD	Relative standard deviation
SAP	Sampling and Analysis Plan
SAR	Sodium adsorption ratio
SOP	Standard operating procedure
SOW	Scope of work or statement of work
SRP	Soluble reactive phosphorus
TDS	Total dissolved solids (filterable residue)
TKN	Total Kjeldahl nitrogen (organic nitrogen)
TMDL	Total Maximum Daily Load
TN	Total nitrogen (defined as the sum of TKN and nitrate + nitrite)
TPA	TMDL Planning Area
TSS	Total suspended solids (non-filterable residue)
WAL	Work Assignment Leader
WAM	Work Assignment Manager

DISTRIBUTION

This document will be distributed to the following USEPA and Tetra Tech staff who are involved in this project, as well as to all responsible subcontractors.

Name Title	Phone, Fax E-mail	Mailing Address
USEPA		
Ron Steg Project Manager	406-457-5024 (phone) 406-457-5055 (fax) steg.ron@epa.gov	Physical Location: USEPA Region 8 Montana Operations Office Federal Building 10 West 15th Street Suite 3200 Helena, MT 59626
Julie DalSoglio Work Assignment Manager	406-457-5025 (phone) 406-457-5055 (fax) dalsoglio.julie@epa.gov	
Tina Laidlaw Quality Assurance Manager	406-457-5016 (phone) 406-457-5055 (fax) laidlaw.tina@epa.gov	
Tony Medrano Quality Assurance Manager	303-312-6336 (phone) 303-312-7828 (fax) medrano.tony@epa.gov	USEPA Region 8 999 18th Street Suite 300 Denver, CO 80202-2466
Russell Kinerson Project Officer	202-566-0392 (phone) 202-566-1053 (fax) kinerson.russell@epa.gov	USEPA Office of Science and Technology 1200 Pennsylvania Ave., NW (4303) Washington, DC 20460
Robert Shippen Quality Assurance Coordinator	202-566-0391 (phone) 202-566-1053 (fax) shippen.robert@epa.gov	
William Telliard Quality Assurance Officer	202-566-1061 (phone) 202-566-1053(fax) telliard.william@epa.gov	
Tetra Tech, Inc.		
Kevin Kratt Work Assignment Leader	216-861-2950 (phone) 216-861-2960 (fax) kevin.kratt@tetratech-ffx.com	Tetra Tech, Inc. 1468 West Ninth Street Suite 620 Cleveland, OH 44113

Joe Faubion Field Monitoring Manager	406-442-5588 406-442-7182 joseph.faubion@ttemi.com	Tetra Tech EMI Power Block Building 7 West 6th Avenue, Suite 612 Helena, MT 59601
James Stribling, Ph.D. Laboratory Director	410-356-8993 410-356-9005 james.stribling@tetratech.com	Tetra Tech, Inc. Biological Research Facility 10045 Red Run Boulevard Suite 110 Owings Mills, MD 21117
Esther Peters, Ph.D. Quality Assurance Officer	703-385-6000 (phone) 703-385-6007 (fax) peterses@tetratech-ffx.com	Tetra Tech, Inc. 10306 Eaton Place, Suite 340 Fairfax, VA 22030
John O'Donnell Quality Control Officer	703-385-6000 (phone) 703-385-6007 (fax) john.odonnell@tetratech-ffx.com	

Northern Analytical Laboratories, Inc.

Kathy Smit Laboratory Manager	406-254-7226 (phone) 406-254-1389 (fax) Nlabs@wtp.net	Northern Analytical Laboratories, Inc. 602 South 25th Street Billings, MT 59101
Denise Jensen Quality Assurance Coordinator	406-254-7226 (phone) 406-254-1389 (fax) Nlabs@wtp.net	

1.0 PROJECT/TASK ORGANIZATION

The purpose of this document is to present the quality assurance project plan (QAPP) for collecting water quality and other data to assess the chemical, physical, and biological characteristics of the Powder River, Tongue River, and Rosebud Creek Total Maximum Daily Load (TMDL) Planning Areas (TPAs). Sample collection will be performed primarily by the Tetra Tech–Environmental Management, Inc. (Tetra Tech EMI) Helena, Montana, office with assistance from consultants and subcontractors as necessary. Other Tetra Tech offices will coordinate analyses of the samples with the assistance of sampling team personnel and the Quality Assurance Officer.

This QAPP provides general descriptions of the work to be performed to collect the samples, the standards to be met, and the procedures that will be used to ensure that the data are scientifically valid and defensible and that uncertainty has been reduced to a known and practical minimum. It describes the procedures used to obtain concentrations of the desired chemical analytes and other parameters of concern. Tetra Tech has already prepared and submitted to the U.S. Environmental Protection Agency (USEPA) and Montana Department of Environmental Quality (MDEQ) a site-specific sampling and analysis plan (SAP), provided as Appendix A. The SAP includes details on the rationale for the sample collection program at the particular location, parameters to be examined, and other information needed to conduct the sampling.

The organizational aspects of a program provide the framework for conducting tasks. The organizational structure and function can also facilitate project performance and adherence to quality control (QC) procedures and quality assurance (QA) requirements. Key project roles are filled by those persons responsible for ensuring the collection of valid data and the routine assessment of the data for precision and accuracy, as well as the data users and the person(s) responsible for approving and accepting final products and deliverables. The program organization chart presented in Figure 1, includes relationships and lines of communication among all participants and data users. The responsibilities of these persons are described below.

Julie DalSoglio, USEPA, Montana Operations Office, will provide coordination of the technical and quality assurance resources of the agency and its contractors in executing this important project. As the Work Assignment Manager (WAM), she will have the following responsibilities:

- Reviewing and approving the project work plan, QAPP, SAPs, and other materials developed to support the project.
- Providing oversight for study design, site selection, and adherence to design objectives.
- Reviewing and approving all contract deliverables for the program, including draft, interim, and final reports.
- Coordinating with contractors, reviewers and others to ensure technical quality and contract adherence.

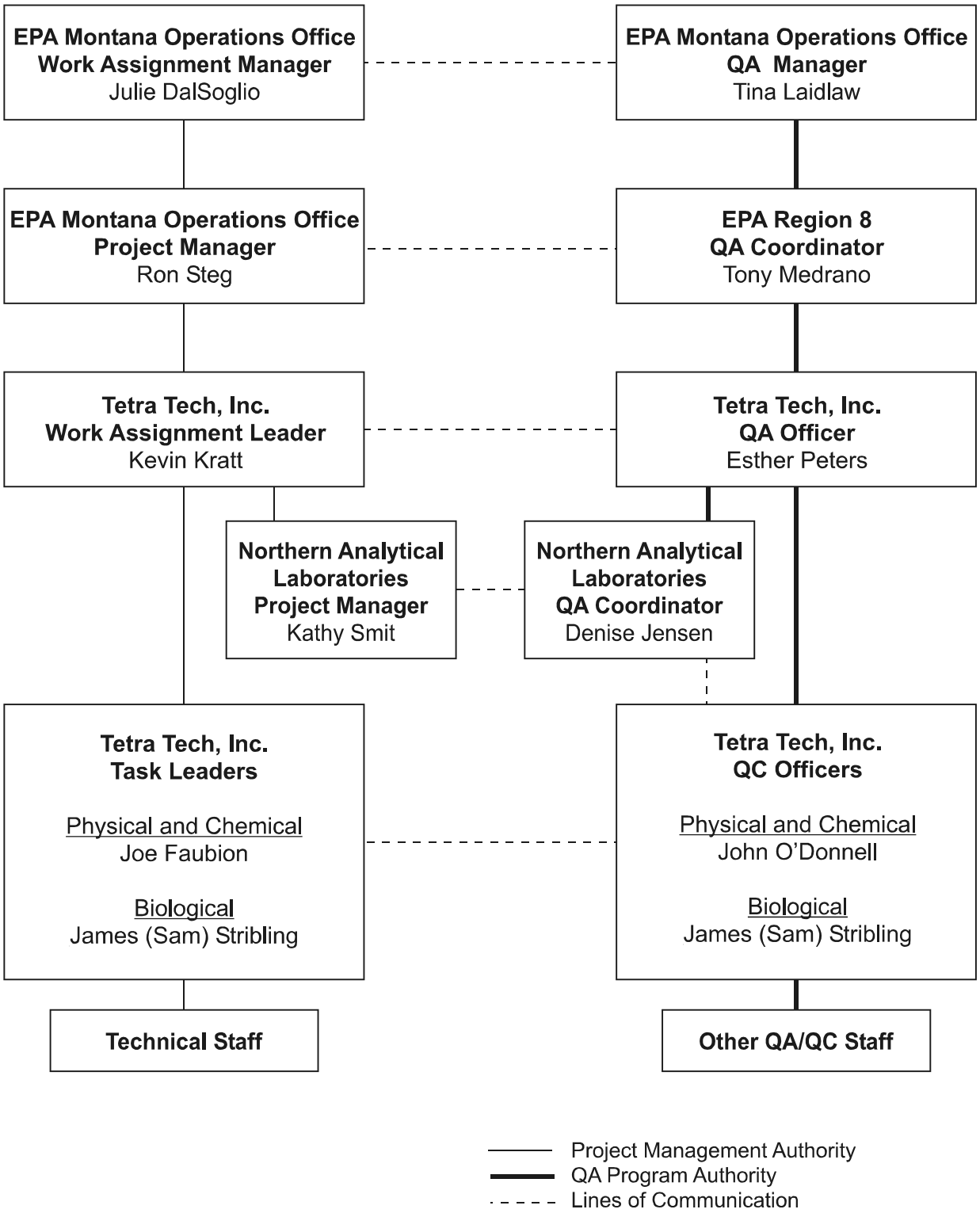

Figure 1. Project Organization.

Ron Steg, USEPA, Montana Operations Office, is providing overall project/program oversight for this study as the Project Manager. He will supervise the assigned project personnel to provide for their efficient utilization by supervising their efforts either directly or indirectly. He will also have the following responsibilities:

- Providing oversight for study design, site selection, and adherence to design objectives.
- Reviewing and approving the project work plan, QAPP, SAPs, and other materials developed to support the project.

The local USEPA Quality Assurance Manager (QAM) is Tina Laidlaw, of the Montana Operations Office in Helena, Montana, and she will be responsible for reviewing and approving all QAPPs and SAPs. Additional USEPA QA Manager responsibilities include the following:

- Reviewing and evaluating field procedures.
- Conducting procedural reviews and supplemental training, as required, at the initiation of field activities.
- Conducting external performance and system audits of the procedures.
- Participating in USEPA QA reviews of the study.

Tony Medrano, of USEPA's Region 8 office in Denver, Colorado, will also retain quality assurance management responsibilities for the region, including the following:

- Conducting external performance and system audits of the procedures, as required.
- Participating in USEPA QA reviews of the study.

The Tetra Tech Work Assignment Leader (WAL) is Kevin Kratt, who will participate in study design and implementation activities. Other specific responsibilities of the WAL include the following:

- Coordinating project assignments in establishing priorities and scheduling.
- Ensuring completion of high-quality projects within established budgets and time schedules.
- Providing guidance, technical advice, and performance evaluations to those assigned to the project.
- Implementing corrective actions and providing professional advice to staff.
- Preparing and/or reviewing preparation of project deliverables, including the QAPP, SAP, and other materials developed to support the project.

- Providing support to USEPA in interacting with the project team, technical reviewers, and others to ensure that technical quality requirements are met in accordance with study design objectives.

The Tetra Tech Quality Assurance Officer (QAO) is Esther Peters, whose primary responsibilities include the following:

- Monitoring QC activities to determine conformance.
- Reviewing the QAPP for completeness and noting inconsistencies.
- Providing support to USEPA and the Tetra Tech WAL in preparing and distributing the work plan, QAPP, and SAP.
- Approving the QAPP and SAP.

The Tetra Tech Task Leaders will be responsible for managing specific tasks during the project (performing field sampling and collecting physical, chemical, and biological water quality data). The Task Leaders will supervise the technical staff participating in their groups and their activities, including implementing the QC program, completing assigned work on schedule with strict adherence to procedures established in the approved SAP, and completing required documentation. The Task Leaders will direct the work of the field sampling team, including collection, preparation, and shipment of samples and completion of field sampling records. To effectively and efficiently perform the required work, the field sampling team will include scientific staff with specialization and technical competence in field sampling activities and specialized habitat assessment. They must perform all work in adherence with the project work plan, QAPP, and approved SAP, including maintenance of sample custody and related documentation. Custody procedures are required to ensure the integrity of the samples with respect to preventing contamination and maintaining proper sample identification during handling. In this role, the field sampling team is responsible for the following:

- Receiving and inspecting the sample containers.
- Completing and signing appropriate field records.
- Assigning tracking numbers to each sample.
- Verifying the completeness and accuracy of chain-of-custody documentation.
- Controlling and monitoring access to samples while in their custody.
- Initiating shipment of the samples to appropriate destinations.

Additional oversight will be provided by the QC Officers, who are responsible for performing evaluations to ensure that QC is maintained throughout the sampling process, that the data collected will be of optimal validity and usability, and that limitations of the data set are minimized as much as

is possible given the logistical and scheduling challenges of the remote site locations. The QC evaluations will include double-checking work as it is completed and providing written documentation of these reviews to ensure that the standards set forth in the QAPP or SAP are met or exceeded. Other QA/QC staff, such as technical reviewers and technical editors selected as needed, will provide peer review oversight on the content of work products and ensure that work products comply with client specifications.

Northern Analytical Laboratories' Laboratory Manager, Kathy Smit, and QA Coordinator, Denise Jensen, will oversee analyses of samples received at their laboratory. They will also do the following:

- Ensure that the laboratory analysts adhere to the project scope of work and QAPP, understand all methods, monitor the operation and performance specifications of all instruments, and maintain supplies needed to conduct the specified analyses.

- Ensure that acceptable progress is made in analyzing field samples that meet or exceed the specified standards for quality and data.

- Complete and sign laboratory records, following custody procedures to ensure the integrity of the samples with respect to prevention of loss or contamination and maintenance of proper sample identification during handling, and verify the completeness and accuracy of sample tracking documentation.

- Control and monitor access to samples while in their custody.

Additional oversight will be provided by the QAOs and Managers for their respective laboratories, who are responsible for performing evaluations to ensure that QC is maintained throughout the analysis procedures in the laboratory and during subsequent documentation of results. The QC evaluations will include double-checking work as it is completed and providing written documentation of these reviews to ensure that the standards set forth in the QAPP are met or exceeded.

Other QA/QC staff, including technical reviewers and technical editors selected as needed, will provide peer review oversight on the content of the work products and ensure that the work products comply with USEPA's specifications.

Technical staff involved with the program will be responsible for reading and understanding this QAPP, including the SAP, and complying with and adhering to its requirements in executing their assigned tasks relative to this program.

The local USEPA QAM or designee will conduct field audits of the sampling teams at least once during the data collection program to ensure that the data collected will be of optimal validity and usability, and that limitations of the data set are minimized as much as is possible given the logistical considerations and challenges of the remote site locations. It is anticipated at this time that the first field audit will be performed during the first monthly sampling event and that the local EPA QAM, Tina Laidlaw, or her designee will conduct procedural reviews to ensure compliance with Montana

standard operating procedures (SOPs) referenced in the SAP, and to introduce any unique aspects of this field program. The field audit will include verification of compliance with the SAP, as well as adherence to the requirements established in the draft QAPP. The field audit will also likely include interviews and consultation relative to habitat assessment and interpretation of observations made during those sampling events.

2.0 PROBLEM DEFINITION/BACKGROUND

Stream segments designated as "water quality impaired" or "threatened" are listed on Montana's Clean Water Act Section 303(d) list and require development of TMDLs. Under court order, the USEPA was ordered to work with the MDEQ to prepare and adopt a schedule to develop all necessary TMDLs for waters on Montana's 1996 Section 303(d) list. In consideration of the original schedule, all necessary TMDLs for the Tongue River, Powder River, and Rosebud Creek watersheds have been accelerated to facilitate coordination between the TMDL program and the ongoing efforts relative to development of coal-bed methane. Consequently, comprehensive assessments of all available data in these three watersheds have been completed and documented in previous reports. The results indicate that additional data are needed to facilitate the completion of the TMDLs for the Tongue River, Powder River, and Rosebud Creek TPAs. A draft SAP has been developed to plan and design a sampling program to specifically address the gaps in existing data, and to initiate a monitoring and sample collection program to evaluate water quality and beneficial uses in the TPAs. Specifically targeted streams and stream segments are detailed in the SAP (Appendix A).

3.0 PROJECT/TASK DESCRIPTION

Task 1: Perform Site Reconnaissance

Tetra Tech, in consultation with MDEQ and USEPA, performed a site reconnaissance to better assess the scope of the field effort entailed in the SAP. This fact-gathering visit evaluated logistical parameters that will affect the scheduling and execution of sample collection and the execution of surveys and other field work. During the site reconnaissance, Tetra Tech and EPA determined

- Specific location and accessibility of proposed sampling stations.
- Permission required to access stations.
- Distance between selected sampling locations.
- General conditions prevailing at the selected sampling locations.
- Other information necessary for completion of the draft sampling plan (e.g., health and safety requirements or any other remarkable observations relative to the sampling locations or condition of the watershed).

Task 2: Modify Sampling and Analysis Plans

Tetra Tech finalized its SAP based on comments provided by both MDEQ and USEPA project teams. The SAP will serve both as a guide to the sampling personnel and as a source of procedural information. The SAP includes the following elements:

- Source assessment site selection rationale.
- General site information (e.g., locations).
- Description of sampling event objectives.
- Appropriate health and safety procedures for the sampling team during the collection and handling of the samples.
- The rationale for the selection of pollutants for analysis and analytical methods required.
- Parameter-specific sampling procedures.
- The physicochemical parameters to be measured on-site and measurement methods to be used.
- Frequency and method of sampling at each sampling point.
- Preservation and sample shipping procedures and protocols, including explicit instructions for the shipment of potentially hazardous materials.
- The necessary logistical information required for sampling.
- Appropriate references to MDEQ's SOPs and guidance documents.

Task 3. Identify Qualified Subcontractors

Tetra Tech will identify qualified subcontractors, where required, to supply products or services to support this data collection effort. These services may include a boat and crew, couriers, or supplemental field staff, and qualified laboratory services. Tetra Tech will verify and ensure that all subcontractors engaged in the execution of this data collection are fully capable, qualified, and otherwise certified to perform work in conjunction with the waters of the state of Montana. Tetra Tech will ensure that on-water transport services and craft are regularly maintained, and that crews are appropriately trained and certified, as applicable, to support and perform services in compliance with the SAP and this QAPP.

Tetra Tech will also identify and qualify the laboratory services contractor for this scope of work. Initial qualifications have included geographical considerations in light of the time-critical analyses required under this QAPP, as well as the laboratory's state certification status. Prior to sampling, Tetra Tech will request and review copies of the laboratory's Quality Assurance Management Plan

(QAMP) and relevant SOPs for analyses required under this QAPP to ensure compliance with reference methods and to ensure fulfillment of the goals for the program. It is not currently anticipated that an on-site audit will be performed in advance of sampling although USEPA or MDEQ audit teams may retain the right to perform such audits.

Task 4: Obtain Sampling Equipment and Supplies

Tetra Tech will provide all necessary sampling equipment, sample bottles, safety equipment (including any specialized equipment required by its field teams and subcontractors), and other supplies needed for successfully conducting each sampling event. Tetra Tech notes that the purchase of equipment will require prior authorization of the Contract Officer and does not foresee the purchase of any large sampling equipment (e.g., composite sampler, dredger sediment sampler, multiprobe) to be paid by the contract. Tetra Tech will comply with all Occupational Safety and Health Administration (OSHA) safety requirements. Tetra Tech will make all logistical arrangements necessary to have equipment, supplies, and appropriate personnel at the facility site in accordance with the schedule negotiated with the USEPA project team. It is currently anticipated that the laboratory will provide precleaned, certified, and prepreserved sample containers and bottleware will be provided by the laboratory for shipment of samples for analysis, where appropriate. Because of the logistical concerns associated with a program of this nature, however, it is also anticipated that Tetra Tech will require its laboratory subcontractor(s) to filter samples on receipt, rather than prior to shipment of samples. This will limit the need for equipment blanks and reduce the requirements for transport of reagent-grade water between sampling locations.

Task 5: Conduct and Oversee Sampling Events

Tetra Tech will conduct each sampling event in accordance with the USEPA-approved SAP and QAPP and, as required, will coordinate the activities of sampling subcontractors to ensure compliance with QAPP and SAP requirements. At this time at least two to three sampling team members will be required to collect water quality data and field samples during each sampling event and to appropriately document and record results. It is anticipated that as much as 2 weeks per month may include active sampling. During monthly episodic sampling, diligent scheduling will be required to ensure preservation of sample integrity and technical holding times for analysis. Because of the time sensitivity of some of the analytical parameters, daily shipments will be required to ensure optimum analytical performance. During this program at least one field audit is anticipated to coincide with the collection of both environmental chemistry samples and biological sampling events. All sampling requirements, protocols, and proposed schedules will be detailed appropriately in the draft final SAP (Appendix A in this QAPP).

Specific requirements during sampling:

a. Tetra Tech will maintain and calibrate multimeter probe instrumentation to collect a number of physicochemical parameters at each site during the sampling efforts, including temperature, electrical conductivity, salinity, turbidity, pH, and dissolved oxygen (DO). Multiprobe instruments will be calibrated daily for the appropriate daily collection parameters; that is, not all parameters will be collected every time the probes are deployed,

and therefore calibration will be focused on the most appropriate series of selected parameters.

b. Flow will be measured at every sampling station on each collection event to collect sufficient data to monitor trends and correlate them against the results of water quality and physicochemical measurements. Flow will be measured and recorded according to the procedures outlined in MDEQ's SOPs (included in Appendix B of this QAPP) in Section 11.4.2, or will be recorded from existing continuous, real-time monitors sited at the station.

c. Tetra Tech will equip six of the sampling stations with fixed temperature probes to collect temperature data throughout the entire program. Two of the stations will be sited in segments of Pumpkin Creek listed for thermal modifications, and four additional data loggers will be sited in reference sites in Otter Creek and Hanging Woman Creek (U.S. Geological Survey [USGS] Stations 06307740, 4517321060850001, 06307600, and 06307570). These continuous monitoring stations will be revisited for verification and calibration monthly as stated in the draft final SAP.

d. Tetra Tech will collect samples for a variety of parameters at each of the sampling sites. Parameter classes are to include: salinity, sodium adsorption ratio (SAR), total dissolved solids (TDS), and chloride and sulfate anions; total suspended solids (TSS); metals; nutrients including forms of nitrogen and phosphorus; meteorological data corresponding to sample collection activities; and some physical sampling (primary, secondary, and tertiary attributes, including habitat assessments and any observable stream discharge assessments). In addition, four sites will be sampled and assessed for benthic macroinvertebrate and periphyton taxonomy sometime during the summer of 2003.

e. Tetra Tech will maintain a sampling log book that contains the following at a minimum: instrument calibration methods, data, and the initials of the responsible personnel for each day's use; sample data, including actual dates and times of sample collection, locations from which the sample aliquots were collected, fractions poured at each sampling point, preservation technique by fraction, and verification of appropriate preservation, where required; sample shipment information and airbill numbers; and any other remarkable observations made regarding the site conditions or deviations from the approved SAP.

Based on the SAP and preliminary discussions with the USEPA Project team, Tetra Tech anticipates that the sampling and analysis will focus on the following field and laboratory analytical parameters:

- Flow.
- Temperature.
- pH.
- DO.
- Conductivity and/or salinity.
- SAR
- TSS and TDS.
- Anions: chloride and sulfate.
- Hardness (calculated).

- Total recoverable and dissolved metals, including arsenic, cadmium, chromium, copper, iron, lead, nickel, selenium, silver, and zinc, minimally.
- Phosphorus, including total phosphorus and soluble reactive phosphorus (SRP).
- Nitrogen series, including nitrate + nitrite, total Kjeldahl nitrogen (TKN, or organic nitrogen), and nitrogen as ammonia.
- Chlorophyll *a*.
- Macroinvertebrate taxonomy: population counts and assessment.
- Periphyton taxonomy.
- Physical sampling, including stream width and depth, erosion potential, bank slope and stability, canopy cover, habitat types, substrate dominance and types, upper bank vegetation, buffer width, and instream cover types.

Task 6: Support Analytical Activities

Tetra Tech will follow MDEQ's SOPs and the Western Pilot Study of USEPA's Environmental Monitoring and Assessment Program (Western EMAP; Peck et. al., 2000) sampling procedures and protocols. Tetra Tech will also make every effort to ship samples to the laboratory for receipt prior to exceedance of the prescribed maximum holding times. Samples collected early in the day for the analysis of chlorophyll *a* and orthophosphates might be affected if there is no way to ship daily because their receipt at the lab will likely exceed their required 48-hour holding times. No field filtration will be performed in this program, other than that for chlorophyll *a*. The receiving laboratory will be responsible for inspecting and unloading sample coolers upon receipt and for filtering and preserving samples as appropriate for analysis of dissolved metals, chloride, sulfate, and SRP as soon as is practicable.

The remoteness of the sampling locations and the distance between them could significantly affect the team's ability to collect valid, unqualified sample data; however, Tetra Tech will make every effort to ensure timely shipment for laboratory analysis. Close coordination will be called for in all sample shipments given the time-sensitive analytical protocols. Samples will be packaged (in Bubble-pac or equivalent) within the shipping container with sufficient ice to ensure arrival at the receiving lab in a chilled condition, if necessary. Other requirements for samples follow:

- Samples will be shipped directly to the analytical laboratories as required by the analytical protocols, including the use of express shipment, couriers, and any additional special packaging and shipping instructions that might apply to express shipments via written technical direction from the local USEPA and MDEQ project team. Tetra Tech will communicate daily with the laboratory(ies) throughout sample collection and submission to ensure optimal performance in the data collection. Tetra Tech will make every effort to ensure that all samples are received in good condition, appropriately preserved, and under custody seal. Although no changes in sampling or analytical protocols are anticipated, deviations from standard procedures and protocols are often required to maximize usable data in remote sampling efforts. Consequently, immediate corrective actions and measures might be mandated to address certain deficiencies caused by unforeseen delays in sample shipment, sample integrity issues, or condition of sample containers. The laboratory project manager (PM) will contact both the Tetra Tech WAL and Field Task Leader for technical direction in the event of such observations. Only the Tetra Tech WAL or QAO, or

authorized designee, in consultation with the USEPA and MDEQ project team, is authorized to provide technical direction to the laboratory. All oral technical directives will be provided in writing within 5 business days of issuance. Only the USEPA WAM or Project Officer (PO) is authorized to approve technical directions provided by the Tetra Tech WAL and QAO.

- Tetra Tech will identify each sample by sample point code, wherever possible.

- Tetra Tech will make every effort to prepare daily shipments to each laboratory performing analyses. Federal Express shipments can be made only Monday through Saturday, and Friday shipments will require advance notice if they include any time-sensitive parameters (because of the maximum 48-hour holding times). Tetra Tech will make every effort to reserve Friday and Saturday shipments for sample analyses with holding times of more than 48 hours and will ensure that where Saturday shipment is employed, sufficient additional ice is used to ensure that non-metals samples remain cool until custody is accepted in the laboratory (which can be difficult in summer months). The laboratories will receive shipments Tuesday through the following Monday. Use of Federal Express also imposes the following conditions:

  - Each shipping container and its contents (samples plus ice) may not exceed 50 pounds.

  - The Friday shipment must have additional special markings to guarantee delivery unless the laboratory can arrange to pick up the samples on Saturday mornings. If the laboratory is picking up the samples on a Saturday morning, the shipment must be marked "Hold Saturday." The laboratory will be notified in advance of any weekend shipments regardless of their mode. Alternatively, a detailed schedule will be provided in advance of collection detailing sample shipment, and only deviations from that schedule will be communicated.

Tetra Tech will promptly notify the USEPA WAM and the laboratory PM of any proposed exceptions to standard protocols and procedures where scheduling, sample containers, preservation, shipping, or delivery is affected. Tetra Tech will not implement any exceptions to standard protocols unless those exceptions are approved by the USEPA WAM through technical direction or acknowledgment issued by the USEPA WAM, QAM, or designee in writing. (In the event that USEPA or MDEQ Project personnel are unavailable for consultation during a sampling event, Tetra Tech will carefully consider implementation of any exceptions to the standard protocols; however, exceptions might have to be implemented without prior notification.) Tetra Tech will document all exceptions, with the underlying conditions and rationale clearly explained in all field logs, and on custody records, where possible.

Tetra Tech will continue collaboration with the laboratory regarding the receipt of samples and custody transfers and will be available for technical consultation, as required, throughout the analytical process. Technical direction, however, will be issued only by the Tetra Tech WAL or QAO in consultation with the USEPA WAM, QAM, or designee. In no instance will technical direction be taken or corrective actions implemented without Tetra Tech's consultation and notification in writing. Under this program, cooler and sample inspection records will be required.

They must detail sample receipt by laboratories; condition of samples on receipt, including any late or lost shipments, breaks in chain of custody, or broken custody seals; and records of improperly preserved samples (including temperature problems). Because the data being collected must be fully defensible under challenge, documentation must be all-inclusive. Full and complete documentation will be developed and maintained to support every observation, decision, and measurement, including the circumstances, conditions, and rationale for each, as well as an estimation of the impact on the data. Laboratory analyses will be performed in strict adherence to the reference methods and according to the laboratory SOPs included in Appendix C of this document.

Task 7: Prepare Sampling Reports

Within 7 days after completion of each monthly sampling event, Tetra Tech will prepare a brief sampling event report that includes any remarkable observations made during the collection and survey effort, states the status of sample receipt by the laboratories, notes any late or lost shipments and reports of broken bottles and improperly preserved samples (including temperature problems), and details specifically any departures from the approved SAP, QAPP, or SOPs included by reference, as well as the reason and rationale for such departure.

Task 8: Verify and Validate Data (for compliance with QAPP and Reference Method requirements)

Verification of results for completeness and compliance with method requirements is the responsibility of the Laboratory PM, QA staff, and Laboratory Manager. Every data delivery will be accompanied by a certifying statement indicating that the data submitted therewith are in full compliance with the reference methods, laboratory SOPs, and this QAPP. Any departures from full compliance will be fully documented including circumstances, conditions and rationale for each, as well as an estimation of the impact on the data.

Laboratory verification must take place as soon as is practicable to ensure that any corrective actions deemed necessary can be initiated within the required holding times or, should resampling be necessary, while sample collection teams remain in the field.

Tetra Tech will compile and verify laboratory data in accordance with the requirements of this QAPP and the requirements of the referenced methods. Any deficiencies will be addressed either through a request for resubmittal from the laboratory, a request for reanalysis, or qualification of the data. Laboratory data will be further assessed for usability against the program requirements prior to incorporation into a format consistent with the balance of data collected for the TPAs.

The general time schedule for the TPA data collection program deliverables is presented in Table 1. Project activities include producing and then finalizing the QAPP; obtaining sampling supplies; conducting and overseeing sampling; and writing draft, draft final, and final reports.

At the time of the initial QAPP preparation, a time line showing project deliverable dates was only able to be developed for recommendation, as sampling was initiated prior to final QAPP submission. Draft and draft final Sampling Event Reports are so titled because it is anticipated that fully qualified laboratory data will not be available for inclusion until after these proposed deliverable dates. Final laboratory data tables will be included with each final sampling event report. With sampling and

Table 1. General Schedule for TPA Monitoring Program Deliverables.

Deliverable	Due Date
Draft QAPP	April 25, 2003
Final SAP	One week after receiving comments from the USEPA and MDEQ project management teams
Final QAPP	One week after receiving comments from USEPA and MDEQ project management teams
Obtain and inspect materials and supplies	At least 5 days prior to each sampling event
Start of sampling event	Upon approval of final QAPP and SAP
Draft Sampling Event Report	Within 2 weeks of completion of sampling event
Draft Final Sampling Event Report (no qualified lab data incorporated)	Within 1 week after receipt of WAM's comments
Draft Final Data Report	November 30, 2003

analysis activities taking place through October 2003, it is anticipated that the first draft final compilation of data will be not be available until the end of November 2003, considering requirements for validation and usability assessments, as well as the Thanksgiving holiday.

4.0 DATA QUALITY OBJECTIVES AND CRITERIA

Data quality objectives (DQOs) are qualitative and quantitative statements that clarify the intended use of the data, define the types of data needed to support the decision, identify the conditions under which the data should be collected, and specify tolerable limits on the probability of making a decision error due to uncertainty in the data (if applicable). DQOs are developed by data users to specify the data quality needed to support specific decisions.

4.1 Project Quality Objectives

The quality of an environmental monitoring program can be evaluated in three steps: (1) establishing scientific assessment quality objectives, (2) evaluating program design for whether the objectives can be met, and (3) establishing assessment and measurement quality objectives that can be used to evaluate the appropriateness of the methods being used in the program. The quality of a particular data set is some measure of the types and amount of error associated with the data.

Sources of error or uncertainty in statistical inference are commonly grouped into two categories:

1. Sampling error: The difference between sample values and in situ "true" values from unknown biases due to sampling design. Sampling error includes natural variability (spatial heterogeneity and temporal variability in population abundance and distribution) not

specifically accounted for in a design (for design-based inference), and variability associated with model parameters or incorrect model specification (for model-based inference).

2. Measurement error: The difference between sample values and in situ "true" values associated with the measurement process. Measurement error includes bias and imprecision associated with sampling methodology, specification of the sampling unit, sample handling, storage, preservation, identification, instrumentation, and the like.

The data requirements for this project encompass aspects of both laboratory analysis and database management to reduce sources of errors and uncertainty in the use of the data. Data needed for the project are listed in Table 2.

Flow measurements are critical in stream assessments and TMDL modeling because they are essential to most pollution management and control activities. Flow measurements will be recorded at every sampling location to provide a comprehensive assessment of the TPA watersheds.

Electrical conductivity and salinity will be monitored at various locations throughout the TPAs, as their measurements are good indicators of dissolved mineral content in the stream ecosystems. Dissolved minerals and mineral salts can limit the beneficial use options for an impaired stream or watershed.

Another field parameter to be monitored is **pH**, which is a measure of the acidity (hydrogen/hydroxide ion concentration) of waterbodies identified for characterization and assessment. Most aquatic organisms have a preferred range of pH, usually pH 6 to 9. Beyond that range aquatic organisms begin to suffer stress, which can lead to death. High pH concentrations also force dissolved ammonia into its toxic, un-ionized form, which can further stress fish and other organisms.

Temperature will be measured in the field for most collection sites because temperature can indicate flow conditions and can be useful in the overall watershed characterization. Although fluctuation and variability in temperature have only moderate effects in other than extreme change on the health of a watershed, in the case of the water column profile analyses the temperature profile will assist in data interpretations relative to stratification of the reservoir. Two sites in Pumpkin Creek, in particular, were listed for thermal modification.

DO is a field chemistry parameter that will be monitored because it is an important measure of the quality of the habitat and overall health of the ecosystem. Oxygen depletion can be an indicator of a number of undesirable physical, chemical, and biological activities in the watershed. Without sufficient DO, fish and other aquatic organisms suffocate and die. Because oxygen is critical to the survival of aquatic organisms, it is important to assess dissolved oxygen levels when characterizing a watershed. Oxygen depletion can kill fish and benthic invertebrates in streams and rivers.

Some of the wet chemistry parameters to be monitored are **total dissolved and suspended solids**, which identify the quantity of material in the water column that is subject to deposition yields. Solids can effect water quality in a variety of ways: **dissolved solids** can indicate high mineral content, making water unsuitable for drinking or industrial use; **suspended solids** can adversely

Table 2. Examples of Some Environmental Data to Be Collected for This Project.

DATA TYPE	MEASUREMENT ENDPOINT(S) OR UNITS
Physicochemical Parameters	
Flow	cubic feet per second [cfs]
Temperature	degrees Centigrade [°C]
Turbidity	nephelometric turbidity unit [NTU]
Dissolved oxygen	milligrams per liter [mg/L]
Conductivity	microsiemans per centimeter [µS/cm]
Salinity	percentage [%]
pH	range from 0 to 14
Chemical Parameters	
Wet chemistry	micrograms per liter [µg/L]
Metals	micrograms per liter [µg/L]
Macroinvertebrate/Benthic Taxonomy	genus / proportional counts; number of each taxon
Periphyton Taxonomy	identification only
Physical Sampling	
Various physical measurements and observations	in appropriate units of measure (meters, centimeters) raw counts, etc.

affect stream ecosystems through undesirable deposition and siltation, and through physical toxic effects ("gill breaking"). Because some nutrients bind to solids, and solids often include oxygen-demanding organic material, it is often necessary to limit the loading of solids into receiving streams.

Nitrogen species, including **nitrate/nitrite, TKN,** and **ammonia** nitrogen, are wet chemistry parameters that measure the quantity of nitrate, nitrate, ammonium (organic nitrogen), or ammonia in the watershed ecosystem. Nitrogen in its ammonia/ammonium or nitrate/nitrite form is a nutrient for aquatic vegetation. Ammonia is an animal waste product derived from the metabolism of various natural and commercial feed products. Elevated levels of these nutrients are good indicators of runoff and effluent waste streams from irrigation and animal production and management operations. Because nitrogen is a limiting nutrient to algal production in estuarine systems, limiting the loading of nitrogen into receiving streams is critical to alleviating eutrophication in downstream waters.

Total phosphorus and **SRP** are wet chemistry parameters that measure the quantity of inorganic phosphorus dissolved in solution and the total phosphorus in the surface water samples. SRP is defined as the dissolved inorganic phosphorus, primarily in the form of phosphates that are readily available to aquatic plant and animal communities. Phosphorus is an important nutrient for growing fish and is the limiting nutrient for growth of aquatic vegetation in freshwater rivers and lakes.

Excess phosphorus inputs can lead to eutrophication in rivers and lakes. Limiting the loading of phosphorus into receiving streams is critical to meeting designated uses in downstream waters.

Hardness is a measure of the polyvalent cations in water, the most common of which are calcium and magnesium (Osmond et al., 1995a). These measurements are used in the calculation of the SAR.

Metals will be monitored because they are easily identifiable constituents of herbicides and pesticides, which can be present in irrigation and mine runoff. Metals can be toxic to algal, benthic, and aquatic species. Although metals can serve useful purposes in an ecosystem, most metals retain their toxicity in an aquatic ecosystem. Heavy metals like selenium and zinc can cause detrimental effects in aquatic organisms. The soluble forms of metals in surface waters are usually ions or un-ionized organometallic chelates or complexes. Factors affecting metal solubility include the pH, the reduction-oxidation (redox) environment of the system, the mineral component oxidation states, and the types and quantities of particles on which metals can adsorb (Osmond et al. 1995b).

Biological Parameters

Chlorophyll *a* will be measured in the water column for the Tongue River Reservoir sampling only; however, samples will be collected and measurements made in each of the stream and river segments where nutrient analyses are performed. The concentration of photosynthetic pigments is used extensively in estimating phytoplankton biomass, because these species are often used as indices of pollutant effects in surface waters (because of their quick response to change in pollutant loadings of metals, nutrients, and organic contaminants). Water column assessments will measure the pigments of suspended organisms in the euphotic zone of the water column in the reservoir, and will be collected from three locations as defined in the SAP (Appendix A): riverine; lacustrine; and transition. Water column profiles will be measured at each of these stations including field measurements of temperature, dissolved oxygen, pH, and conductivity at one meter intervals. Samples of chlorophyll *a* will be collected only from the euphotic zone, while three depths will be sampled for nutrient chemistry at one meter below the surface, at the midpoint, and one meter from the bottom. Stream sampling will include assessment of attached algae scraped from rocks on the bottom of stream and river waters. The sample collections will be filtered in the field, and the filters will be frozen and shipped to the laboratory for further processing.

Periphyton include algae, fungi, bacteria, protozoa, and organic matter found in channel substrates (Western EMAP, 2000). They are used as indicators of the effects of pollutants in surface waters because their abundance and composition in a given area are affected by the water quality at that location (APHA, 1995). They respond quickly to pollutant loadings such as metals, nutrients, herbicides, and hydrocarbons. They also are sensitive to habitat destruction and acidification (Western EMAP, 2000). Periphyton chlorophyll will be collected at each stream sampling station concurrent with the regular monitoring of chemical water quality. These samples will be collected by scraping streambed and riverbed substrates to evaluate population densities and, during the biological sampling (once during the summer), population diversity. The biological sampling will include taxonomy for the periphyton community, while the regular monthly monitoring will evaluate only the measured chlorophyll *a* in total mass per area scraped. At this time whether measurements

will be provided to the laboratory or the results will be exressed simply as total micrograms per sample measurements is uncertain.

Benthic macroinvertebrates are common organisms found in surface waters, where they help move energy through food webs. Macroinvertebrates are ideal for studying stream condition because of their generally restricted mobility and often multiyear life cycles, allowing them to integrate the effects of both chemical and physical perturbations over time. Macroinvertebrates are excellent indicators of aquatic health. Because of the range of life spans and varying needs throughout their life span, macroinvertebrates are excellent indicators of chronic and acute pollution impacts. Because some groups are more tolerant to pollution than others, they can be used as indicators of water quality (Barbour et al., 1999). A fixed-count subsampling method will be used to assess benthic macroinvertebrates, and this technique will be employed to target approximately 500 organism subsamples. All specimens will be identified to the lowest possible taxon, primarily genus but species if possible. The laboratory techniques, data sheets, and SOP for these determinations are included in Appendix D to this QAPP.

Physical habitat assessment will also be performed using the visual-based approach. Complex in-channel characteristics of streams function to provide (1) dissipation of erosive flow energy and (2) suitable habitat for support of a "healthy" aquatic biota. As streams degrade through physical and hydrologic processes, the physical habitat structure becomes less complex and thus has a diminished capacity to support biota and withstand the erosiveness of storm flows. Physical habitat assessment will rate streams based on their qualitative position within a continuum of structural complexity. It is based on field observation of a series of instream, channel shape, and riparian characteristics, each of which is placed in the continuum for that site. The scores are summed for an overall physical habitat quality score. The sample reach will be laid out and physical habitat assessments will be performed at each of the sampling locations to describe the physical characteristics of each stream. Physical characteristics indicate relative stream channel stability as well as the estimated biological potential of the stream. This information can also provide guidance on what types of periphytin and macroinvertebrates might be present because different species are generally adapted to different streambed particle size, steambed shape and area, and water flow (fast, moderate, or slow moving). In addition, the physical characteristics can serve as a snapshot of current conditions to which past and future measurements can be compared. The project quality objective for these data is as follows:

> *Laying out the sampling reach and performing physical habitat assessments will follow approved methods.*

At this time it is anticipated that the local and regional USEPA offices will retain responsibility for performing the physical habitat assessment sometime during the program; therefore, it is outside the scope of this QAPP.

This study is being undertaken to provide information that will be used to determine the need for and to develop TMDLs for the study areas. Pollutant loadings might require management to reduce risks to the health of humans and organisms dependent on the quality of the water. Loss of instream fish and invertebrate populations, for example, can occur if chemical contaminants exceed certain thresholds or risk-based criteria. Uncertainty in the data due to sampling and measurement errors or

errors introduced during data manipulation could result in identifying the potential for an effect on the population when one does not exist or in not identifying an effect when one does exist. Reducing data uncertainty is of highest priority. Because these data might be used to promulgate regulations on technological designs to manage pollutant contributions to the watershed, or to define beneficial uses of the water in it, it is important to reduce uncertainty by using appropriate QC protocols. Descriptions of conventional data quality indicators, i.e. — precision, accuracy, completeness, representativeness, and comparability — follow in Section 11 of this QAPP.

Methods and procedures described in this document are intended to reduce the magnitude of measurement error sources and frequency of occurrence. The quality objectives for this project are related to sample handling, as well as measuring of certain parameters on-site. Those project quality objectives are the following:

- Use of standardized, repeatable data and sample collection procedures.
- Use of trained scientists to perform the data and sample collection and analyses.
- Calibration of meters for flow rate, pH, temperature, oxygen, or other parameters to be collected on-site to a known standard as per manufacturers' specifications.

4.2 Measurement Performance Criteria

Measurement performance criteria are quantitative statistics used to interpret the degree of acceptability or utility of the data to the user. These criteria, also known as data quality indicators (DQIs), include the following:

- Precision
- Accuracy
- Representativeness
- Completeness
- Comparability

DQIs that cannot be expressed in terms of accuracy, precision, or completeness will be reported by fully describing the specified method; all other quality requirements will be fulfilled. Measurement performance criteria for data to be collected during this project are provided in Tables 3A and 3B, and are further discussed in Section 11.0.

5.0 SPECIAL TRAINING REQUIREMENTS/CERTIFICATION

This QAPP and supporting materials will be distributed to all participants. A procedural review will be conducted before the field teams are mobilized. The procedural review will include the requirements of the QAPP, SAP, and referenced SOPs, as well as instrument manufacturers' operation and maintenance instructions. It will be performed concurrently with a check that all equipment and sampling gear are fully functional and ready for deployment. In addition, there will be discussions and demonstrations of sampling method(s) to be used and discussions regarding

Table 3A. Measurement Performance Criteria for Chemical Analyses.

Measurement Parameter	Water		Completeness (%)
	Precision	Accuracy	
Field Water Quality Measurements	RPD (%)	Recovery (%)	≥90
- Stream flow			
- Temperature	0.2 °C[1]	±20%	
- Turbidity	1 NTU[1]	±20%	
- Dissolved oxygen (DO)	± 0.1 mg/L[1]	±20%	
- Conductivity	± 0.001 to ± 0.1 µS/cm[1]	±20%	
- Salinity	± 0.01%[1]	±20%	
- pH	± 0.01 units[1]	±20%	
- Total suspended solids (TSS)	20	±30% (70–130)	
- Total dissolved solids (TDS)	20	±30% (70–130)	
- Chloride, Sulfate	20	±30% (70–130)	
- Total phosphorus	20	±30% (70–130)	
- Orthophosphate	20	±30% (70–130)	
- Ammonia as nitrogen	20	±30% (70–130)	
- Total Kjeldahl nitrogen (TKN)	20	±30% (70–130)	
- Nitrate/nitrite	20	±30% (70–130)	
Metals	RPD (%)	% Recovery	≥90
- Iron	20	±30% (70–130)	
- Nickel	20	±30% (70–130)	
- Zinc	20	±30% (70–130)	
- Arsenic	20	±30% (70–130)	
- Cadmium	20	±30% (70–130)	
- Chromium	20	±30% (70–130)	
- Copper	20	±30% (70–130)	
- Lead	20	±30% (70–130)	
- Selenium	20	±30% (70–130)	
- Silver	20	±30% (70–130)	

NA = Not available
[1] Dependent upon range of measurement used on Horiba U-10.

Table 3B. Measurement Performance Criteria for Biological Analyses.

Measurement Parameter	Precision	Accuracy	Completeness (%)
Periphyton			
- Community composition[1]	± 10%	NA	90
- Chlorophyll ($\mu g/m^2$)[1]	± 1 $\mu g/cm^2$ or ± 20%		90
- Phaeophyton ($\mu g/m^2$)[1]	± 1 $\mu g/cm^2$ or ± 20%		90
Benthic macroinvertebrate species composition			90
- Identification	PTD ≤ 10%	NA	90

PTD = percent taxonomic disagreement.

[1]Derived from Table 4-1 of the EMAP QAPP (page 84) (USEPA, 1997).

specific health and safety concerns. Each sampling team will consist of, at a minimum, one sample collector and a QC Officer, who will ensure strict adherence to the project protocols and will check all documentation for correctness and to verify that no transcription errors have been made in preparing sample custody records and other project documentation.

6.0 DOCUMENTATION AND RECORDS

Thorough documentation of all field sample collection and handling activities is necessary for proper processing in the laboratory and, ultimately, for interpreting study results. Field sample collection and handling will be documented in writing, as discussed in, and on forms included with the SAP (Appendix A), as well as on the following forms and labels:

- A field log notebook for general observations and notes.
- A Field Data Record Form that contains information about observations and measurements made and samples collected at the site.
- Checklists for each sampling event, sampling point, and sampling time.
- A Sample Identification Label that accompanies and identifies each sample.
- A Chain of Custody form that provides additional tracking information and requests specific analyses for each sample.

A description of each sample at each station will be recorded on a Chain of Custody form (see Appendix A, Sampling and Analysis Plan). The form will document the sampling date, time, sampler's name, sampling site location/description, and sample description. The Chain of Custody form will be submitted to the laboratory with the samples for analysis and will document transfer of custody to the laboratory. All entries will be made in ink and no erasures will be made. If an

incorrect entry is made, the information will be crossed out with a single strike mark, which will be initialed and dated by the sampler/recorder. All portions of the chain of custody records will be filled out completely, and any blank sample lines will be "Z'ed" out (a diagonal line from the top left corner of the line immediately following the last entry continuing to the bottom right corner of the last empty line) to eliminate possible addition after completion. Any additional issues or observations that might affect sample analysis will be added in the space provided for comments on the form. A copy of the form will be retained by the sampler, and that copy will be faxed to the laboratory, the Tetra Tech WAL, Field Task Leader, and the QAO documenting the day's shipments. The Tetra Tech QAO or designee will review copies of custody records for appropriateness and for assessment of any documentation-related deficiencies. After sufficient sampling has taken place to ensure adequacy of documentation and record keeping, the QAO will reduce the frequency of daily reviews to approximately 10 percent of sample shipments.

A Sample Identification Label (to be placed on the sample bottle/container) will be completed to accompany each sample throughout the chain of custody. The label will document the project name, sampling site location, and tracking code. All entries will be made in indelible ink and will correlate with the specimen and sample information on the Field Data Record Form.

Samples will be shipped from the field to the sample analysis laboratory by priority overnight delivery service. The Tetra Tech Field Task Leader will retain copies of all shipping airbills. Unused sample portions will be retained in the receiving laboratory for a period of at least 45 days following Tetra Tech's receipt of the final analysis report.

The WAL and Task Leaders and the appropriate PMs will maintain files, as appropriate, as repositories for information and data used in preparing any reports and documents during the project and will supervise the use of materials in the project files. The following information will be included:

- Any reports and documents prepared.
- Contract and work assignment information.
- Project QAPP and SAPs.
- Results of technical reviews, data quality assessments, and audits.
- Communications (memoranda; internal notes; telephone conversation records; letters; meeting minutes; and all written correspondence among the project team personnel, subcontractors, suppliers, or others).
- Maps, photographs, and drawings.
- Studies, reports, documents, and newspaper articles pertaining to the project.
- Special data compilations.

- Spreadsheet data files: physical measurements, analytical chemistry data (hardcopy and disk).

Copies of the field log books and physical characterization/water quality data sheets and sampling checklists will be supplied to the Tetra Tech Field Task Leader at the close of each sampling event. These data will be used in conjunction with chains of custody, laboratory receipt acknowledgments, and inspection checklists to compile the sampling event reports. Formal reports submitted to USEPA that are generated from the data will be subject to technical and editorial review prior to submission to USEPA, and will be maintained at Tetra Tech's Cleveland, Ohio, office in the central file (disk and hardcopy). The data reports will include a summary of the types of data collected, sampling dates, and any problems or anomalies observed during sample collection.

If any change(s) in this QAPP are required during the study, a memo will be sent to each person on the distribution list describing the change(s), following approval by the appropriate persons. The memos will be attached to the QAPP. All written records relevant to the sampling and processing of samples will be maintained at Tetra Tech's Cleveland office in the central file. Unless other arrangements are made, records will be maintained for a maximum of 2 years following project completion.

7.0 SAMPLING DESIGN

This section describes the strategy and procedures that will be used to collect water quality and other data to support the development of TMDLs for the Powder River, Tongue River, and Rosebud Creek TPAs. Sample collection will be performed primarily by the Helena, Montana, office of Tetra Tech EMI, with assistance from consultants and subcontractors as necessary. Sampling will follow the specifications established specifically and by reference in the SAP. The SAP was developed following in-depth document searches and review of available data to define limitations and deficiencies in the existing data set, and to define the data elements required to complete characterization and fulfill the requirements for their comprehensive assessment. Tetra Tech will conduct sampling events in accordance with the detailed SAP, and comments from USEPA incorporated into the SAP. Field blanks will be collected as appropriate for QC purposes; however, no field duplicates will be collected per the client's instructions.

Samples collected will be grab samples. They will be collected as rapidly as possible to prevent passage of time in the field for those samples with short ($\leq$ 48 hours) holding times. Samples will be collected in the appropriate bottles and glassware for shipment to laboratories for analysis. Measurements that must be taken on-site will be collected using a multimeter probe that has been precalibrated by the vendor and calibrated daily prior to use for data collection. The SAP was prepared to encompass all sampling activities scheduled for this program, and it includes details such as all appropriate sampling locations, sampling frequencies and parameters for analysis.

The SAP includes maps that identify the sampling locations, and it lists the analytical parameters to be requested at each one.

8.0 SAMPLING METHODS

Chemical water quality samples will be obtained according to the procedures established in MDEQ SOP Sections 10 and 11, identified by reference in this QAPP and SAP and included in Appendix B to this document. Water flow measurements will be determined in accordance with the procedures outlined in Section 11 of the referenced SOPs and will be recorded for each sampling station. Chemical, biological, and physical habitat assessments will be performed at specific locations within the sampling reach as prescribed in the SAP. Because habitat assessment is expected to be conducted by USEPA, it is outside the scope of this document.

Biological samples will be collected in accordance with MDEQ SOPs (Appendix B) and Western EMAP protocols, identified by reference in this QAPP and the SAP (Appendix A). To limit seasonal variability, all periphyton and benthic macroinvertebrate sampling will occur within a restricted time frame (index period) of late May through early October in accordance with Hannaea's *Periphyton Collection Procedures* (Appendix D). Preservation and enumeration of the periphyton community composition samples will also be performed in accordance with the MDEQ *Periphyton Collection Procedures*.

Benthic invertebrates from each sample location will be sampled once during the index period in accordance with Chapter 11 of the Western EMAP (Peck et al., 2000). A modified D-frame kick net (500-µM mesh openings) will be used to sample at randomly selected positions (left, center, right) along transects established within each sampling reach. Samples from each transect will be combined into a composite sample for the reach and preserved in ethanol according to the prescribed procedures.

9.0 SAMPLE HANDLING AND CUSTODY

Water samples will be collected and placed in the labeled transfer bottles and delivered to the laboratory as soon as possible following collection. Table 4 lists the volumes and containers that will be used to collect samples.

Table 5 lists the handling requirements for each of the samples collected in the TPAs. The samples taken for laboratory analysis will be stored in coolers containing resealable bags of ice. The temperature inside the coolers will be checked with a thermometer throughout the holding period. The samples that are required to be preserved below a specific pH with sulfuric acid (H_2SO_4), nitric acid (HNO_3), or hydrochloric acid (HCl) will be checked using pH paper.

All samples will be transferred to the receiving analytical laboratory using Chain of Custody forms. The sample Chain of Custody form (SAP, Appendix A) acts as a record of sample shipment and a catalog of the contents of each shipment (coinciding with information on the field record), in addition to maintaining a complete record of evidentiary custody transfer. It will contain the following, at a minimum:

- Sampler's name
- Project name

Table 4. Laboratory Sample Collection Volumes and Containers for Freshwater Aqueous Samples.

Parameter	Recommended Sample Volume	Sample Bottle	Additional Volume for QC on 10%	Sample Bottle
TSS	1,000 mL	1-L HDPE	500 mL	500-mL HDPE
Chloride	100 mL	100-mL HDPE	100 mL	100-mL HDPE
TDS	400 mL	500-mL HDPE	200 mL	250-mL HDPE
Total phosphorus	250 mL	250-mL HDPE	100 mL	100-mL HDPE
Orthophosphate	100 mL	100-mL HDPE	100 mL	100-mL HDPE
Ammonia as nitrogen	800 mL	1-L HDPE	800 mL	1-L HDPE
TKN	1,500 mL	2-L HDPE	1,000 mL	1-L HDPE
Nitrate/nitrite	200 mL	250-mL HDPE	200 mL	250-mL HDPE
Sulfate	250 mL	250-mL HPDE	200 mL	250-mL HPDE
Metals, SAR, hardness	1,000 mL	1-L HDPE	1,000 mL	1-L HDPE
Metals, Dissolved (for laboratory filtration)	1,000 mL	1-L HDPE	1,000 mL	1-L HDPE
Chlorophyll *a* (reservoir profiles - euphotic zone composites)	1,000 mL	1-L amber HDPE (opaque)	1,000 mL	1-L Amber HDPE (opaque)
Chlorophyll *a* (streams)	two 50-mL aliquots	two, 50-mL HDPE filtered onto two, 47-mm glass fiber filters	two, 50-mL aliquots	two, 50-mL HDPE filtered onto two, 47-mm glass fiber filters

HDPE = high density polyethylene; These are *method-recommended* containers, the laboratory may recommend shared containers across parameters.

Table 5. Sample Handling Requirements for Freshwater Aqueous Samples to Be Analyzed by the Laboratory.

Parameter	Max. Holding Time	Temperature	Preservatives
Total suspended solids (TSS)	7 days	cool, 4 °C	none
Chloride, sulfate	28 days	cool, 4 °C	none
Total dissolved solids (TDS)	7 days	cool, 4 °C	none
Total phosphorus	28 days	cool, 4 °C	H_2SO_4 to pH < 2
Soluble reactive phosphate (SRP; lab-filtered prior to analysis)	48 hours	cool, 4 °C	none
Ammonia as nitrogen	28 days	cool, 4 °C	H_2SO_4 to pH < 2
Total Kjeldahl nitrogen (TKN)	28 days	cool, 4 °C	H_2SO_4 to pH < 2

Parameter	Max. Holding Time	Temperature	Preservatives
Nitrate/nitrite	28 days	cool, 4 °C	H_2SO_4 to pH < 2
Metals, total recoverable	28 days for mercury, 6 months for others	cool, 4 °C	HNO_3 to pH < 2
Metals, dissolved (lab filtered)	filter ASAP; preserve 6 months for analysis	cool, 4 °C	none; on receipt at lab, filter and preserve with HNO_3 to pH < 2
Chlorophyll *a* (reservoir)	48 hours to filter. If filtered from surface waters with pH >7, sample may be kept frozen for 3 weeks; if sample pH <7, process ASAP	cool, 10 °C, if unfiltered	none [1] unfiltered
Chlorophyll *a* (stream samples and reservoir euphotic zone composites)	48 hours to filter. If filtered from surface waters with pH >7, sample may be kept frozen for 3 weeks; if sample pH<7, process ASAP	cool, 10 °C	none [1]

[1] If residual chlorine is present, add approximately 4 mg of sodium thiosulfate ($Na_2S_2O_3 \cdot 5H_2O$) per liter of sample to neutralize 1 mg/L residual chlorine. Add the sodium thiosulfate to the empty sample bottle prior to filling.

- Page number (e.g., 1 of 1)
- Sample location (facility name, waste stream, sampling point)
- Collection date and time
- Sample number
- Number of containers
- Type of analysis required
- Laboratory recipient signature
- Laboratory receipt date and time

Immediately following the packing of each shipping container, each container (cooler) will be secured with packaging tape.

10.0 ANALYTICAL METHODS

All water sample analyses except the field measurements of flow, temperature, turbidity, DO, conductivity, salinity, and pH will be completed by fully qualified subcontract laboratories. The analytical chemistry methods to be used, as well as the sample volume requirements, detection limits, and holding times, will be consistent with the laboratory's QA and QC plans and SOPs included as Appendix C to this QAPP. Temperature, turbidity, DO, conductivity, salinity, and pH will be measured in accordance with the requirements of the SAP (Appendix A) and the Montana SOPs (Appendix B). If necessary, total residual chlorine will be measured by using paper indicator strips. It is anticipated that total residual chorine will be screened at each of the sampling sites once to determine the need for continuing verification throughout the program.

Samples will be shipped to the laboratory daily for processing and analytical testing. Sample processing and analytical methods and reporting limit requirements are included in Table 6, and analytical laboratory SOPs for sample receipt, preparation, and determinitive analysis are included in Appendix C for each parameter of interest.

Sample collection and analysis for periphyton and benthic macroinvertebrate taxonomy will be performed once during the summer in accordance with the SAP (Appendix A) and will use the collection and analysis techniques described in the SAP and SOPs included in Appendix D.

11.0 QUALITY CONTROL

Data quality is addressed, in part, by consistent performance of valid procedures documented in the SOPs. It is enhanced by the training and experience of project staff (Section 5.0) and documentation of project activities (Section 6.0). This QAPP, SAPs, and other supporting materials will be distributed to all sampling personnel. A QC Officer will ensure that samples are taken according to the established protocols and that all forms, checklists, and measurements are recorded and completed correctly during the sampling event.

To establish the precision, accuracy, and representativeness of data obtained from the sampling effort, QC samples for laboratory analyses will be collected according to Table 6. Three types of QA and QC samples will be analyzed during each sampling event: field blanks, sample QC, and laboratory QC.

Field blanks will be collected for all the chemical parameters listed in Tables 2 and 3A in Sections 4.1 and 4.2, respectively, to ensure that no contamination was introduced during sample collection, preservation, and handling procedures. They will be collected once during each week long sampling event. At the same time samples are collected, field blanks will be prepared by running analyte-free de-ionized water through the same equipment used to collect samples, collecting the de-ionized water in the appropriate sample containers, and preserving the de-ionized water with the same procedures used to preserve samples. Field blanks will be collected, stored, shipped, and analyzed with the other samples. If field blank target analyte concentrations are detected, field blanks will be examined to determine the source of contamination.

Analyte concentrations measured in samples collected during the event will be considered valid when no corresponding field blank analyte concentrations are detected or when the sample analyte concentrations are at least 10 times the field blank analyte concentrations. If a field blank analyte concentration is at least 5 times, but less than 10 times the sample analyte concentration, the numerical result will be reported as an upper limit of the true analyte concentration by the laboratory. If a blank sample analyte concentration is less than 5 times the sample analyte concentration, the results for that analyte will be considered unacceptable.

Table 6. Study Target Analytes and Corresponding Analysis Methods.

USEPA Analysis Method			Method Quantitation Limit[b]	
Water	**Periphyton Chlorophyll-*a***	**Analyte[a]**	**Water**	**Periphyton Chlorophyll-*a***
160.2	NA	TSS	4 mg/L	
325.3	NA	Chloride	1.0 mg/L	
375.2	NA	Sulfate	3.0 mg/L	
160.1	NA	TDS	10 mg/L	
365.2	NA	Total phosphorus	0.01 mg/L	
365.1	NA	SRP	0.003 mg/L	
350.1	NA	Ammonia as nitrogen	0.050 mg/L	
351.3	NA	TKN	0.2 mg/L	
353.2	NA	Nitrate plus nitrite (NO_3/NO_2)	0.010 mg/L	
SM2340B	NA	Hardness (calculated as $CaCO_3$)	1.0 mg/L	
		Metal Analyte	µg/L	
200.2* / 200.9	NA	Arsenic	3.18	
200.2* / 200.8	NA	Cadmium	0.1	
200.7	NA	Calcium, magnesium, sodium (common ions)	500	
200.2* / 200.9	NA	Chromium	1.0	
200.2* / 200.8	NA	Copper	1.0	
200.2* / 200.7	NA	Iron	10	
200.2* / 200.9	NA	Lead	3	
200.2* / 200.7	NA	Nickel	20	
200.2* / 200.9	NA	Selenium	1.0	
200.2* / 200.9	NA	Silver	3	
200.2* / 200.7	NA	Zinc	10	
SM 10200H	SM10200H	Chlorophyll - *a*	0.1 mg/L	0.1 total mg

[a] Analytes selected for analysis were defined in the SAP (Appendix A)
[b] These values are estimates, based on a compilation of laboratory SOPs, PQL, and MDL data, and on the Montana Water Quality Standards published in the MDEQ Circular WQB-7 dated July 15, 1994. Note method quantitation limits for sulfate, total phosphorus, and SRP. Where possible the laboratory will report to MDL in effort to attain program goals.
200.2* acid digestion for total recoverable metals only. Dissolved portions will be analyzed without digestion. All "common ions" analysis will be performed on dissolved fractions, only. (Stated reporting limits are for each element, not a combined value.)

Deviations from the method quality objectives of this study will be noted and brought to the attention of the appropriate organization's QAO, manager, or state lead, who will initiate the corrective action system described in Section 17.0. However, due to the nature of this study, no provision has been made for replacing data that has been lost.

Analytical **sample QC** is required to be collected for 10 percent of the samples for each sampling event. The additional volumes collected for analytical QC are used to perform duplicate and spiked sample analyses or matrix spike and matrix spike duplicate analyses, depending on method requirements. For the purpose of this collection, sample QC will be evaluated using the criteria established in Tables 3A and 3B of this QAPP, and as detailed in the laboratory SOPs included in Appendix C. Any results noted as deviating from program or laboratory QC acceptance criteria require immediate investigation, and thorough documentation as detailed in the assessment and response actions in Section 17.0 of this QAPP. Corrective actions may vary widely from repreparation and reanalysis to direct narrative address to disqualification of sample data for use. Under no circumstances will outlying sample or QC results be submitted without detailed explanation. The WAL should be contacted immediately regarding deviations for which there is not a suitable analytical corrective action due to holding time or other restrictions, so that recollection can be requested, if possible.

In addition **laboratory QC** analyses will be performed concurrent with sample preparation and analyses. Laboratory QC includes analysis of appropriate reagent or method blanks for each analytical method or technique, as well as analysis of laboratory control sample or certified standard reference materials as appropriate. Method and reagent blanks should be free from analytes of interest at levels above the project minimum reporting levels. The same criteria applied to field blanks will be applied to laboratory blanks in sample data interpretation for use. (Analyte concentrations measured in samples collected during the event will be considered valid when no corresponding field blank analyte concentrations are detected or when the sample analyte concentrations are at least 10 times the field blank analyte concentrations. If a field blank analyte concentration is at least 5 times, but less than 10 times the sample analyte concentration, the numerical result will be reported as an upper limit of the true analyte concentration by the laboratory. If a blank sample analyte concentration is less than 5 times the sample analyte concentration, the results for that analyte will be considered unacceptable.)

Quality control requirements for benthic macroinvertebrate taxonomy include independent specimen identifications by a secondary taxonomist. For the purposes of this program a minimum of one sample would be recommended for secondary identification such that an estimate of taxonomic precision could be developed.

Following data entry operations, all spreadsheets will be proofread using the original handwritten field and laboratory data sheets, where available. This review will be done by someone other than the data entry specialist.

Measurement performance criteria for data to be collected during this project are discussed in the following sections.

Precision

Precision is a measure of internal method consistency. It is demonstrated by the degree of mutual agreement between individual measurements or enumerated values of the same property of a sample, usually under demonstrated similar conditions. Precision of sampling methods is estimated by taking duplicate samples at the same sampling site at approximately 10 percent of the sites, usually at the final sampling point(s).

This QC calculation also addresses uncertainty due to natural variation and sampling error. Precision is calculated from two duplicate samples by relative percent difference (RPD) as follows:

$$RPD = \frac{|C_1 - C_2|}{(C_1 + C_2)/2} \times 100$$

where C_1 = the larger of the two values, and C_2 = the smaller of the two values. If it is to be calculated from three or more replicate samples (as is often the case of laboratory analytical work), the relative standard deviation (RSD) will be used and is calculated as

$$RSD = \frac{s}{\overline{X}} \times 100$$

where s = standard deviation, and X = mean of repeated samples.

The standard deviation or the standard error of a sample mean(s) is calculated as:

$$SD = \sqrt{\frac{\sum_{i=1}^{n} (X_i - \overline{X})^2}{n-1}}$$

where X_1 = measured value of the replicate, X = mean of repeated sample measurements, and n = number of replicates. Precision can also be expressed in terms of the range of measurement values.

For this project no duplicate field samples will be collected to assess sampling precision, but field blanks will accompany samples to assess potential for contamination in the sample collection process. Physicochemical measurements of the stream at each sampling point will also be collected and the precision of their measurements will be determined.

Accuracy

Accuracy is defined as the degree of agreement between an observed value and an accepted reference or true value. Accuracy is a combination of random error (precision) and systematic error (bias), due to sampling and analytical operations. Bias is the systematic distortion of a measurement process that causes errors in one direction so that the expected sample measurement is always greater or lesser to the same degree than the sample's true value. USEPA now recommends that the term *accuracy* not be used and that *precision* and *bias* be used instead (USEPA, 1995).

Since accuracy is the measurement of a parameter and comparison to a "truth," and the true values of environmental physicochemical characteristics cannot be known, use of a surrogate is required. Accuracy of field measurements will be assumed to be determined through use of precision. Accuracy of laboratory chemical measurements will be determined by analysis of matrix spikes and matrix spike duplicates, laboratory control samples (fortified blanks), and other method-specified QC samples. Analyses for specific nutrients and metals will include the use of spiked samples or certified standard reference materials, where appropriate, to determine percent recovery. In the absence of manufacturers' certified range the recoveries for spiked analytes should not exceed $\pm$30 percent of the true values to be acceptable (unbiased). The accuracy of field equipment for the measurement of temperature, turbidity, DO, conductivity, salinity, and pH will be determined at a minimum of two points which span the expected range of values for these parameters. Instruments used and procedures for determining accuracy include the following:

Temperature sensors: (Horiba U-10)

The accuracy of temperature sensors used in this project will be checked using a standard thermometer.

Turbidity: (Horiba U-10)

The accuracy of turbidity sensors used in this project will be checked using the autocal solution provided by Pine Environmental Services, Inc., which contains a certified 0 NTU solution.

DO sensors: (Horiba U-10)

The accuracy of DO sensors and methods used in this project will be determined using the ambient air oxygen concentration, which is approximately 8.5 parts per million, as the saturation value. The actual concentration of DO at saturation is determined by measuring temperature and reading the corresponding concentration from a standard table and by making the required correction for nonstandard atmospheric pressure conditions.

Conductivity and salinity sensor (Horiba U-10)

The accuracy of the salinity and conductivity sensor used in this project will be checked using the autocal solution provided by Pine Environmental Services, Inc. The conductivity sensor is calibrated from the autocal solution, which contains a certified 0.449 µS/cm solution. The salinity sensor is calibrated from a calculation based on the calibration of the conductivity sensor of the Horiba U-10.

pH sensors (Horiba U-10)

The accuracy of pH sensors used in this project will be checked using the autocal solution provided by Pine Environmental Services, Inc., which contains a certified pH 4 buffer solution.

$$\%C = \frac{V}{T} \times 100$$

where V = the number of measurements judged valid and T = the total number of measurements. For this project, sampling will be considered complete when no less than 90 percent of the samples collected during a particular sampling event are judged valid.

Comparability

Two data sets are considered to be comparable when there is confidence that the two sets can be considered equivalent with respect to the measurement of a specific variable or group of variables. Comparability is dependent on the proper design of the sampling program and on adherence to accepted sampling techniques, SOPs, and QA guidelines.

12.0 INSTRUMENT/EQUIPMENT TESTING, INSPECTION, AND MAINTENANCE

Periodic regular inspection of equipment and instruments is needed to ensure the satisfactory performance of the systems. Equipment to be used during the sampling event is listed in the appropriate SOPs. Before any piece of sampling or measurement equipment is taken into the field it will be inspected to ensure that the equipment is appropriate for the task to be performed, all necessary parts of the equipment are intact, and the equipment is in working order. In addition, the equipment will be visually inspected prior to its use. Broken equipment will be labeled "DO NOT USE" and returned to the Tetra Tech office to receive necessary repairs, or will be disposed of. Backup field equipment will be available during all field activities in the event of an equipment breakdown.

The objective of preventive maintenance is to ensure the availability and satisfactory performance of the measurement systems. All field measurement instruments will receive preventative maintenance in accordance with the manufacturer's specifications.

13.0 INSTRUMENT CALIBRATION AND FREQUENCY

The Horiba U-10 will be used for in-field, instantaneous measurement of temperature, turbidity, DO, conductivity, salinity, and pH. In addition, pH paper strips will be used to double-check the accuracy of the Horiba U-10 pH measurements and to measure the pH of samples during adjustments for preservation purposes. The Horiba U-10 is precalibrated upon arrival and has a specially formulated calibration solution that allows a one-step calibration for all probes.

The calibration of temperature, turbidity, DO, conductivity/salinity, and pH probes will be checked prior to and following each sampling event, or as deemed necessary by the multiprobe's manufacturer, using the certified standard solution. Field calibrations will be recorded in the field sampling log book. Individual sensors will be considered to be operating correctly if the instrument reading is within 15 percent of the calibration standard value. If the two values are not within 15 percent of each other, the probe will be cleaned and recalibrated. If these two values are still not within 15 percent of each other following cleaning and recalibration, the probe itself will be replaced.

14.0 INSPECTION/ACCEPTANCE OF SUPPLIES AND CONSUMABLES

Supplies and consumables are those items necessary to support the sampling and analytical operation, including bottleware, calibration solutions, hoses, decontamination supplies, preservatives, and various types of water (e.g., potable, deionized, organic-free). Upon delivery of supplies, Tetra Tech will ensure that types and quantities of supplies received are consistent with what was ordered, and with what is indicated on the packing list and invoice for the material. The supplier will be contacted immediately if any discrepancies are found.

While preparing for specific sampling events, the field sampling Task Leaders will be responsible for acquiring and inspecting materials and solutions that will be used for obtaining the samples for field measurements. It is anticipated that the laboratory will provide only bottles that have been properly cleaned, dried, and stored with their caps on. Prepreserved containers will be labeled with the preservative used and an identifying lot number indicating the laboratory has certified it for use in sample collection. Other materials must also meet specific requirements as indicated by the appropriate manufacturer; for example, only certified standard solutions will be used for the multiprobe calibration. Buffers and standards will be checked for expiration dates and appearance (correct color).

15.0 NONDIRECT MEASUREMENTS

Comparison of data collected during this field effort to historical data will be used for qualitative assessment only. Assessment of applicability for historical data is outside the scope of this document, and is not addressed any further.

16.0 DATA MANAGEMENT

Samples will be documented and tracked via Field Data Record forms, Sample Identification Labels, and Chain of Custody records. The Field Task Leader will be responsible for ensuring that these forms are completed and reviewed for correctness and completeness by the designated field QCO. Copies of these forms will be maintained by Tetra Tech in the project files. A sampling report will be prepared following each sampling event. Data entered into any spreadsheet or other format will be manually checked by another person against the original source to ensure accurate data entry. If there is any indication that requirements for sample integrity or data quality have not been met (for

samples or measurements collected by Tetra Tech), the Tetra Tech QAO will be notified immediately (with an accompanying explanation of the problems encountered).

Laboratory data will be managed in accordance with established protocols, and will be submitted to Tetra Tech in hardcopy and in electronic database format as well as scanned data recorded on CD-ROM. The electronic data will be submitted in a format to be negotiated with the lab. At a minimum, the electronic data files will include the date and time of sample collection, date received, date of preparation and or analysis, requested parameter, analytical batch ID, results, and data qualifiers. Electronic data will be provided for all samples and QC including laboratory blanks, control samples, and spiked samples analyzed in a format compatible with Montana's STORET-indexed surface water quality database. Hardcopy data packages will be paginated, fully validatable raw data packages including an analytical narrative with a signed certification of compliance with this QAPP and all method requirements; copies of Chain of Custody forms; sample inspection records; laboratory sample and QC results; calibration summaries; example calculations by parameter; and copies of all sample preparation, analysis, and standards logs adequate to reconstruct the entire analysis. The CD-ROM data will include a full copy of the paginated report scanned and stored in portable document format (PDF) for potential future submission to the client, if requested, and for long term storage in the project files. Initially, the full raw data package will be submitted to the Tetra Tech QAO for assessment of attainment and compliance with the program goals and guidance.

All computer files associated with the project will be stored in a project subdirectory by Tetra Tech (subject to regular system backups) and will be copied to disk for archive for the 5 years subsequent to project completion (unless otherwise directed by the USEPA WAM).

17.0 ASSESSMENT AND RESPONSE ACTIONS

The QA program under which this work assignment will operate includes performance and system audits with independent checks of the data obtained from sampling, analysis, and data-gathering activities. The QA programs followed by subcontractors will be reviewed by Tetra Tech, Inc., the prime contractor, to ensure that similar levels of QA/QC are attained. The essential steps in the QA program are as follows:

1. Identify and define the problem.
2. Assign responsibility for investigating the problem.
3. Investigate and determine the cause of the problem.
4. Assign and accept responsibility for implementing appropriate corrective action.
5. Establish effectiveness of and implement the corrective action.
6. Verify that the corrective action has eliminated the problem.

Immediate corrective actions form part of normal operating procedures and are noted in records for the project. Problems not solved this way require more formalized, long-term corrective action. In the event quality problems that require attention are identified, Tetra Tech or the subcontractor will determine whether attainment of acceptable quality requires either short- or long-term actions. If a failure in an analytical system occurs (e.g., performance requirements are not met), the appropriate

QC Officer or subcontractor QA Coordinator will be responsible for corrective action and will immediately inform either the WAL or QAO, as appropriate. The WAL has primary responsibility for monitoring the activities of this project and identifying/confirming any quality problems. These problems will also be brought to the attention of the Tetra Tech QAO, who will initiate the corrective action system described above, document the nature of the problem, and ensure that the recommended corrective action is carried out. The QAO has the authority to stop work on the project if problems affecting data quality that will require extensive effort to resolve are identified. The USEPA WAM will be notified of major corrective actions and stop work orders.

Performance audits are quantitative checks on different segments of project activities; they are most appropriate for sampling, analysis, and data-processing activities. Performance audit techniques include checks on sampling equipment, volume measurements, and the analysis of data quality using QC and spiked samples. At this time, no performance or system audits are scheduled or planned for this collection beyond the initial field audit and ongoing routine document and data audits. As data entries, calculations, or other activities are checked, the person performing the check will sign and date a hard copy of the material or complete a review form, as appropriate, and provide this to the Tetra Tech WAL for inclusion in the project files.

System audits are qualitative reviews of project activity to check that the overall quality program is functioning and that the appropriate QC measures identified in the QAPP are being implemented. One internal system audit will be conducted by the Tetra Tech QAO or designee during this study.

18.0 REPORTS TO MANAGEMENT

Upon completion of periodic sampling activities, the Tetra Tech WAL will contact the WAM to summarize sampling team progress for the preceding week. Following completion of field sampling, Tetra Tech will prepare a field sample collection summary (i.e., detailed listing of all sampling participants, sampling locations, and specimens collected) for review by the WAM as described in Section 3.0, Task 5.

Following completion of each of the data quality assessments, the Tetra Tech QAO or designee will prepare a Data Quality Assessment Report and submit copies to the WAL for inclusion in project records, and to the WAM, if required. The data quality assessment will include any required qualification of data based on observations, relevant laboratory or field QC analyses, or other observations which may affect data quality. The laboratory data can then be incorporated into final sampling event reports to consolidate the information corresponding to each event.

When needed, reports will be submitted to the WAL summarizing incidents of technical direction requests from laboratory or field staff, required corrective actions, and any other issues affecting data quality or usability. These observations will be compiled and submitted in interim QA reports where warranted, in informal file memoranda to the WAL for inclusion in the project files, or for submission to the agency QAM as required. These regular QA reports and memoranda, along with routine data quality assessments performed throughout the data collection, will be the basis of the final QA report, as required in Task 0 of the Work Assignment.

19.0 DATA REVIEW, VERIFICATION, AND VALIDATION

Data validation and review services provide a method for determining the usability and limitations of data, and provide a standardized data quality assessment. All field record forms and Chain of Custody forms will be reviewed by the Tetra Tech WAL (assisted by the QAO, as needed) for completeness and correctness. Tetra Tech will be responsible for reviewing data entries and transmittals for completeness and adherence to QA requirements. Data quality will be assessed by comparing entered data to original data or by comparing results with the measurement performance criteria summarized in Section 4.2 to determine whether to accept, reject, or qualify the data. Results of the review and validation processes will be reported to the WAM. Analytical data provided by the laboratories will be reviewed prior to its release by the Laboratory QAO, and Laboratory Manager, and will include a certifying statement that the data included have been reviewed for compliance with the reference methods and this QAPP.

20.0 VERIFICATION AND VALIDATION METHODS

All Field Data Record forms and Chain of Custody forms will be reviewed by the Tetra Tech WAL. The Tetra Tech QAO will review a minimum of 5 percent of the Field Data Record Forms and other records. Any discrepancies in the records will be reconciled with the appropriate associated field personnel and will be reported to the WAM. Laboratory validation and verification methods are outside of the scope of this QAPP, however it is anticipated that the laboratory validation and verification will include an assessment of completeness and method compliance to include verification of sample calculations, and of any required manual data entry. The analytical narrative reports will include discussions of attainment of the program goals as established herein. The submission of samples to the sample analysis laboratory will include Chain of Custody forms documenting sampling time and date. This information will be checked by the analytical laboratory to ensure that holding times have not been exceeded. Violations of holding times will be reported (by the laboratory) to the Tetra Tech WAL who will consult with the Tetra Tech, USEPA and MDEQ QA personnel to develop corrective action recommendations, and define any recommended technical directives. Finally, the USEPA WAM will be consulted with deficiencies, observations and findings, as well as with corrective action and technical directive recommendations for consideration and approval.

21.0 RECONCILIATION WITH USER REQUIREMENTS

As soon as possible following completion of the sample collection and analyses, precision, accuracy, and completeness measures will be assessed by Tetra Tech and compared with the criteria discussed in Section 4.0. This will represent the final determination of whether the data collected are of the correct type, quantity, and quality to support their intended use for this project. Any problems encountered in meeting the performance criteria (or uncertainties and limitations in the use of the data) will be discussed with the project QA personnel and USEPA WAM, and will be reconciled if possible.

All analytical data will undergo an assessment to determine their suitability for use in characterization of the TPAs and for incorporation with the existing data into models appropriate for assessment of need and development of TMDLs for the watersheds. This assessment will be conducted first by laboratory management and QA staff, and then by the Tetra Tech WAL with the assistance of the QAO. Uncertainties and limitations in the use of these data and interpretation of results will be provided to USEPA, and it is anticipated that data will be qualified, where necessary, using the conventions outlined in USEPA's *National Functional Guidelines for Inorganic Data Review*. These conventions afford the capability to flag the data and include an estimation of potential bias, where appropriate, as well as providing the opportunity for recommendation on the interpretation of results in the data report.

REFERENCES

American Public Health Association (APHA). 1995. Standard Methods for the Examination of Water and Wastewater. Nineteenth Edition. American Public Health Association, Washington, D.C.

Barbour, M.T., J. Gerritsen, B.D. Snyder, and J.B. Stribling. 1999. Rapid Bioassessment Protocols for Use in Streams and Wadeable Rivers: Periphyton, Benthic Macroinvertebrates and Fish. Second Edition. EPA/841-B-99-002. U.S. Environmental Protection Agency, Office of Water, Washington, D.C. July 1999.

Osmond, D.L., D.E. Line, J.A. Gale, R.W. Gannon, C.B. Knott, K.A. Bartenhagen, M.H. Turner, S.W. Coffey, J. Spooner, J. Wells, J.C. Walker, L.L. Hargrove, M.A. Foster, P.D. Robillard, and D.W. Lehning. 1995a. WATERSHEDSS:Water, Soil and Hydro-Environmental Decision Support System, http://h2osparc.wq.ncsu.edu.

Osmond, D.L., J. Spooner, and D.E. Line. 1995. Systems of Best Management Practices for Controlling Agricultural Nonpoint Source Pollution: The Rural Clean Water Program Experience. Fact Sheet no. 6. NCSU Water Quality Group, North Carolina State University, Raleigh, NC.

Peck, D.V., J.M. Lazorchak, and D.J. Klemm (editors). 2000 (Unpublished Draft). Environmental Monitoring and Assessment Program–Surface Waters: Western Pilot Study Field Operations Manual for Wadeable Streams. EPA/XXX/X-XX/XXXX U.S. Environmental Protection Agency, Washington, D.C. **(Western EMAP)**

USEPA (U.S. Environmental Protection Agency). 2001. *EPA Requirements for Quality Assurance Project Plans, QA/R-5*. EPA 240-B-01-003. U.S. Environmental Protection Agency, Office of Environmental Information, Washington, DC.

U.S. Environmental Protection Agency (USEPA). 1997 (Draft). Environmental Monitoring and Assessment Program (EMAP) Research Plan 1997. U.S. Environmental Protection Agency, Washington, D.C.

U.S. Environmental Protection Agency (USEPA). 1997. Environmental Monitoring and Assessment Program: Integrated Quality Assurance Project Plan for Surface Waters Research Activities. **(EMAP QAPP)**.

Appendix A

Sampling and Analysis Plan

Sampling and Analysis Plan

Powder River, Tongue River, Rosebud Creek TMDL Planning Areas

April 21, 2003

Prepared for the Montana Department of Environmental Quality by Tetra Tech, Inc.
Technical support and direction provided by the U.S. Environmental Protection Agency

MDEQ Project Manager: Art Compton

USEPA Project Manager: Ron Steg

Tetra Tech Inc. Project Manager: Kevin Kratt

Table of Contents

1.0 Introduction 1
2.0 Methods 3
3.0 Stream Monitoring 4
3.1 Monitoring Locations 4
3.2 Water Chemistry 6
3.2.1 Salinity and SAR 6
3.2.1.1 Data Gaps 6
3.2.1.2 Source Assessment 7
3.2.2 Total Suspended Solids/Sediment 8
3.2.3 Temperature 9
3.2.4 Metals 10
3.2.4.1 Data Gaps 10
3.2.4.2 Source Assessment 10
3.2.5 Nutrients 11
3.2.5.1 Chemistry 11
3.2.5.2 Source Assessment 12
3.2.6 Multimeter Parameters 12
3.3 Biology 12
3.3.1 Macroinvertebrates 13
3.3.2 Periphyton 14
3.4 Weather 14
3.5 Flow 14
3.6 Physical Sampling 14
4.0 Tongue River Reservoir Monitoring 16
5.0 Equipment 17
References 23
Appendix A – Monitoring Activities and Frequencies A-1
Appendix B – Monitoring Locations B-1
Appendix C – Data Forms C-1

TABLES

Table 1-1. Evaluated Causes of Impairment in the Tongue River, Powder River, and Rosebud Creek TPAs 2
Table 3-1. Monitoring Stations for the 2003 Sampling Program. 5
Table 3-2. Monitoring Stations for the 2003 Salinity, TDS, and SAR Sampling Program 7
Table 3-3. Monitoring Stations for the 2003 TSS Sampling Program. 8
Table 3-4. Monitoring Stations for the 2003 Temperature Sampling Program 9
Table 3-5. Monitoring Stations for the 2003 Metals Sampling Program 10
Table 3-6. Monitoring Stations for the 2003 Nutrient and DO Sampling Program 11
Table 3-7. Monitoring Stations for the 2003 Biological Sampling Program 13
Table 5-1. General Items 17
Table 5-2. Water Chemistry/Monthly Sampling Supplies 18
Table 5-3. Equipment for Lake Sampling 19
Table 5-4. Equipment and Supplies for Periphyton Sampling 20
Table 5-5. Equipment and Supplies for Benthic Macroinvertebrate Sampling 21
Table 5-6. Equipment and Supplies for Physical Habitat Sampling 21
Table 5-7. Personal Gear 22
Table A-1. Sampling Activities for 2003 at the Proposed Monitoring Locations A-2
Table A-2. Summary of the 2003 USGS Sampling Program A-3
Table A-3. Time Line of Proposed Monitoring Activities and Frequency of Monitoring Activities A-4

1.0 INTRODUCTION

Stream segments designated as "water quality impaired" or "threatened" are listed on Montana's Section 303(d) list and require the development of Total Maximum Daily Loads (TMDLs). On September 21, 2000, the United States District Court of Montana ordered the U.S. Environmental Protection Agency (USEPA) to work with the Montana Department of Environmental Quality (MDEQ) to develop and adopt a schedule to develop all necessary TMDLs for waters on Montana's 1996 Section 303(d) list by May 5, 2007. See *Friends of the Wild Swan, Inc. et al.* v. *U.S. Environmental Protection Agency*, CV 97-35-M-DWM. In accordance with the original schedule, all necessary TMDLs for the Tongue River, Powder River, and Rosebud Creek watersheds in Montana were to be completed by December 31, 2006. However, the MDEQ has decided to accelerate the schedule for these watersheds to facilitate coordination between the TMDL program and ongoing efforts related to the development of coal-bed methane (CBM). The final target date for completion of all necessary TMDLs for these watersheds is December 31, 2003.

Comprehensive assessments of all available data for these three watersheds were completed and documented in previous reports. The results indicate that additional data are needed to facilitate the completion of the TMDLs for the Tongue River, Powder River, and Rosebud Creek TMDL Planning Areas (TPAs). The Sampling and Analysis Plan (SAP) outlined in this document describes a monitoring and sample collection plan to evaluate water quality and beneficial uses in the TPAs. Targeted streams and associated potential causes of impairment are shown in Table 1-1.

In 2003 extensive monitoring will be conducted in all of the targeted segments to assess the chemical, physical, and biological characteristics of these waterbodies and to confirm the need for TMDL development. Information will also be collected to better estimate the loadings from the various sources. Monitoring will occur between March and September. The information that follows in this SAP provides the detail necessary to implement the monitoring plan. This document is organized into three sections: Methods, Stream Monitoring, and Tongue River Reservoir (TRR) Monitoring.

Table 1-1. Evaluated Causes of Impairment in the Tongue River, Powder River, and Rosebud Creek TPAs

Segment	Algal Growth/ Chlorophyll-*a*	Bank erosion	Chlorides	Metals	Nutrients	Organic Enrichment/DO	Other Inorganics	Pathogens	Salinity	SAR	Siltation	Suspended Solids	TDS	Thermal Modifications
Tongue River Watershed														
Lower Tongue River			x	x			x		x	x		x	x	
Middle Tongue River			x	x			x		x	x		x	x	
Upper Tongue River			x	x					x	x			x	
Tongue River above the Reservoir			x	x					x	x			x	
Hanging Woman Creek			x	x			x		x	x		x	x	
Otter Creek			x	x					x	x		x	x	
Pumpkin Creek			x						x	x			x	x
Tongue River Reservoir	X		x		x	x			x	x		x	x	
Powder River Watershed														
Lower Powder River			x	x	x		x	x	x	x		x	x	
Upper Powder River			x	x	x		x	x	x	x		x	x	
Little Powder River			x				x		x	x	x	x	x	
Mizpah Creek			x			x	x		x	x		x	x	
Stump Creek			x						x	x		x	x	
Rosebud Creek Watershed														
Lower Rosebud Creek		x	x	x	x		x		x	x		x	x	
Middle Rosebud Creek			x	x	x		x		x	x		x	x	
Upper Rosebud Creek			x	x	x		x		x	x		x	x	

DO = Dissolved Oxygen, SAR = sodium adsorption ratio, TDS = total dissolved solids

2.0 METHODS

This SAP contains information necessary to understand what, where, when, and how data will be collected for the monitoring events described herein. The guidance documents cited below describe the methods necessary to complete the monitoring outlined in this SAP. These documents include:

- *Montana Water Quality Monitoring Standard Operating Procedures (SOP)* (available at http://www.deq.state.mt.us/ppa/mdm/SOP/sop.asp), specifically the following sections:
    - 10.0 – Sample Collection
    - 11.0 – Methods for Collecting, Analyzing, and Reporting Water Quality and Sediment Chemical Data
    - 12.0 – Methods of Assessing the Biological Integrity of Surface and Groundwater
    - 13.0 – Methods for Assessing the General Health and Physical Integrity of Surface Waters.
- *Stream Channel Reference Sites: An Illustrated Guide to Field Technique* (U.S. Forest Service) (available at http://www.stream.fs.fed.us/publications/documentsstream.html).
- *USEPA's Rapid Bioassessment Protocols For Use in Streams and Wadeable Rivers: Periphyton, Benthic Macroinvertebrates, and Fish* (Second Edition) (USEPA, 1999).

Monitoring in the Tongue River, Powder River, and Rosebud Creek watersheds will follow the guidance provided in these documents. Monitoring is expected to include the following components:

- Water quality monitoring: synoptic, low-flow, and storm event monitoring
- In situ monitoring
- Biological surveys: benthic macroinvertebrates and periphyton
- Physical surveys: habitat quality assessments and hydrologic assessments

3.0 STREAM MONITORING

The sections below describe the SAP for streams in the Powder River, Rosebud Creek, and Tongue River watersheds. The sections are organized by parameter. In general, additional chemical, biological, and physical data are needed to address data gaps and sources, and to facilitate watershed modeling. In some cases additional data are not required because sufficient data have already been collected, or will be collected by other agencies in 2003 (see the Tongue River, Powder River, and Rosebud Creek TMDL Status Reports). The recommended monitoring stations and the associated monitoring efforts are summarized in Appendix A (Table A-1). A time line for the 2003 monitoring plan is also included in Appendix A (Table A-3).

3.1 Monitoring Locations

All monitoring locations were selected based on current understanding of the sites using available physical information from various maps and geographic information system (GIS) data. Preliminary monitoring station selections were made on the basis of historical data on water quality, the nature of land use in the vicinity, and apparent accessibility. Table 3-1 summarizes the monitoring stations for the 2003 sampling program. The locations of each station are shown in Appendix B. Water quality, in situ monitoring, and flow monitoring stations are point locations where monitoring activities will be conducted at a specified location. Supplemental physical and biological characterizations will be conducted at identified locations, and specific lengths of stream will be associated with these assessments. However, because the length of stream is dependent on stream width, actual reach lengths cannot be reported at this time.

The U.S. Geological Survey (USGS) will also monitor several sites in the Tongue River, Powder River, and Rosebud Creek in 2003 (Table A-2). In addition to grab samples, discharge, precipitation, temperature, and salinity are monitored by USGS at several real-time continuous monitoring sites. The type and amount of sampling varies from one USGS station to another, and some supplemental sampling will occur at several sites to fill identified data gaps. A summary of the USGS monitoring sites is included in Appendix A, and the sites are shown in the maps in Appendix B.

Table 3-1. Monitoring Stations for the 2003 Sampling Program.

Site ID	STORET ID	Site Type	Description	Latitude	Longitude	Drainage Area (mi^2)
Powder River Watershed						
Stump1	Y21STMPC01	New	Stump Creek near the mouth	45°47'08"	105°03'08"	TBD
06325500	Y19LPOWR01	Current	Little Powder River at the mouth near Broadus, MT	45°27'39"	105°19'39"	1,965
06326300	Y20MZPHC01	Historic	Mizpah Creek near Mizpah, MT	46°15'39"	105°17'36"	797
06326520	Y21PWDRR01	Historic	Powder River at the mouth near Terry, MT	46°44'15"	105°25'43"	13,512
06326000	Y21PWDRR03	Historic	Powder River near Mizpah, MT	46°15'00"	105°16'00"	12,132
06325650	Y21PWDRR04	Historic	Powder River near Powderville, MT	45°45'08"	105°05'15"	TBD
06324710	Y18PWDRR01	Historic	Powder River at Broadus, MT	45°25'37"	105°24'05"	8,748
Rosebud Creek Watershed						
06296003	Y14ROSBC01	Current	Rosebud Creek at the mouth near Rosebud, MT	46°15'53"	106°28'30"	1,302
06295250	Y14ROSBC02	Historic	Rosebud Creek near Colstrip, MT	45°46'03"	106°34'10"	799
06295110	Y14ROSBC03	Historic	Rosebud Creek at Kirby, MT	45°19'59"	106°59'10"	TBD
Tongue River Watershed						
06307600	Y15HNGWC01	Historic	Hanging Woman Creek near Birney, MT	45°17'57"	106°30'28"	470
06307570	Y15HNGWC02	Historic	Hanging Woman Creek below Horse Creek near Birney, MT	45°08'02"	106°29'00"	321
06307740	Y16OTTRC01	Historic	Otter Creek at Ashland, MT	45°35'18"	106°15'17"	707
451732106085001	Y16OTTRC02	Historic	Otter Creek below Taylor Creek near Otter, MT	45°17'32"	106°08'50"	TBD
Pumpkin1	Y16PMPKC01	New	Pumpkin Creek near the mouth at the Tongue River 12-Mile Dam fishing access	46°14'49"	105°44'54"	TBD
Pumpkin2	Y16PMPKC02	New	Pumpkin Creek approx. 1.6 miles upstream from the mouth	46°14'14"	105°42'53"	TBD
06307500	Y15TNGR01	Current	Tongue River at the TRR Dam near Decker, MT	45°08'29"	106°46'15"	1,770
06307610	Y16TNGR01	Historic	Tongue River below Hanging Woman Creek near Birney, MT	45°20'19"	106°31'28"	2,533
Salinity Source Assessment						
NewX	TBD	New	Multiple Sites (to be determined) to characterize source contribution to instream salinity	TBD	TBD	TBD
T&Y1	TBD	New	T&Y irrigation ditch	TBD	TBD	TBD

TBD – To be determined.

3.2 Water Chemistry

Monitoring and sample collection activities in the Tongue River, Powder River, and Rosebud Creek watersheds are anticipated to extend over at least 7 months. Monitoring over this time span allows for collection of data that encompasses temporal changes that may occur in the segments of interest. Monitoring during this interval will capture spring snowmelt, summer withdrawals, and evaporation. The timing of sampling efforts will be based on the following factors: (1) flow conditions, (2) weather conditions, (3) logistical considerations, and (4) sufficient temporal spacing of sampling. MDEQ protocols will be used for all water chemistry sampling events, and data will be recorded and submitted to MDEQ using the Site Visit Forms included in Appendix C.

Quality assurance and quality control (QA/QC) procedures for water chemistry samples at all sites will include the following:

- 10 percent of the samples will be field blanks
- Daily calibration of flow meters and multimeters
- Chain of custody forms (Appendix C)

3.2.1 Salinity and SAR

3.2.1.1 Data Gaps

Additional data are needed to determine whether beneficial uses in the Tongue River, Powder River, and Rosebud Creek watersheds are impaired because of salinity or sodium adsorption ratio (SAR). There are few recent data for several of the Section 303(d)-listed segments, and monitoring will fill any data gaps. Routine, synoptic water quality monitoring will include regularly scheduled grab samples to determine the following parameters:

- *Field parameters:* Water temperature, electrical conductivity (EC), and flow.
- *Laboratory parameters* – Total dissolved solids (TDS, including calcium, chloride, magnesium, sodium, and sulfate), and SAR (calculated).

Grab samples will be obtained once per month from April through September at the stations shown in Table 3-2. EC data will be obtained during every site visit at every station in the monitoring schedule (see Table 3-1) using a multimeter field unit (see Section 3.2.6). USGS will also monitor several sites for salinity, TDS, and SAR in the Tongue River, Powder River, and Rosebud Creek (see Table A-3 in Appendix A). These data, along with continuous EC sampling at stations 06324500 (Powder River at Moorhead), 06306300 (Tongue River at the state border), and 06307830 (Tongue River near Ashland), will complement the 2003 sampling program.

Table 3-2. Monitoring Stations for the 2003 Salinity, TDS, and SAR Sampling Program

Site ID	Site Type	Description	Latitude	Longitude
06307600	Historic	Hanging Woman Creek near Birney, MT	45°17'57"	106°30'28"
06307570	Historic	Hanging Woman Creek below Horse Creek near Birney, MT	45°08'02"	106°29'00"
06307740	Historic	Otter Creek at Ashland, MT	45°35'18"	106°15'17"
451732106085001	Historic	Otter Creek below Taylor Creek near Otter, MT	45°17'32"	106°08'50"
Pumpkin1	New	Pumpkin Creek near the mouth at the Tongue River 12-Mile Dam fishing access	46°14'49"	105°44'54"
06326300	Historic	Mizpah Creek near Mizpah, MT	46°15’39”	105°17’36”
Stump1	New	Stump Creek near the mouth	45°47'08"	105°03'08"
06307500	Current (flow)	Tongue River at the TRR Dam near Decker, MT	45°08'29"	106°46'15"
06295250	Historic	Rosebud Creek near Colstrip, MT	45°46’03”	106°34’10”
06295110	Historic	Rosebud Creek at Kirby, MT	45°19'59"	106°59'10"

TBD = To be determined.

3.2.1.2 Source Assessment

There is not a good understanding of the sources of salinity and SAR in the Tongue River, Powder River, and Rosebud Creek watersheds. A multiyear study will be needed to fully determine contributions from various sources, including the extent and contribution from irrigation under various conditions (rainfall, soil type, crop type). The different stages of the multiyear study are outlined below.

- Conduct a land use analysis to determine the extent of irrigated land and the amount of irrigated water used.
- Contact landowners and local Conservation Districts to determine the extent and type of irrigated land.
- Contact state and local experts about irrigation as a source of salinity.
- Identify sources using state and local contacts, GIS, and field surveys.
- Field verify irrigated land information.
- Monitor irrigation returns and segments of the river affected by irrigation.

Because TMDL development efforts cannot wait for the results of the multiyear study, interim steps will be taken during the summer of 2003 to assess the sources of salinity and SAR. Continuous monitoring will be established at one or two irrigation returns and upstream and downstream of one or two agricultural areas. USEPA and MDEQ will coordinate with local landowners to obtain permission and landowner cooperation. A multimeter, such as a YSI or Horiba unit, will be installed and used to obtain continuous EC and temperature samples at small specified intervals (e.g., hourly). Local precipitation at or near the gages will be checked daily in

conjunction with this study, and irrigation practices and returns will be documented by the landowner. Field surveys of irrigation practices and irrigation returns will be conducted throughout all three watersheds in conjunction with the stream sampling plan. Components of the field surveys are shown below.

- Use the Natural Resources Conservation Service (NRCS) Phase I and II Stream Corridor Assessment reports to obtain an understanding of irrigation returns and land use (NRCS, 2001a, 2001b, 2002a, 2002b).
- Verify irrigation returns and estimate or measure flows where feasible.
- Locate, identify, and measure major irrigation returns in all three watersheds.
- Document the type and extent of irrigation practices throughout the watersheds (flood irrigation versus sprinkler irrigation).

Given the time needed to find interested landowners and select sites, it is anticipated that this study component will not be conducted until 2004.

3.2.2 Total Suspended Solids/Sediment

Additional data are needed to determine if beneficial uses in the Tongue River, Powder River, and Rosebud Creek watersheds are impaired because of total suspended solids (TSS). There are few recent data for several of the Section 303(d)-listed segments, and monitoring will fill the identified data gaps. Routine, synoptic water quality monitoring will include regularly scheduled grab samples to determine the following parameters:

- *Field parameters:* flow, turbidity, and pebble counts
- *Laboratory parameters* – TSS

Grab samples will be obtained once per month from April through September at the stations shown in Table 3-3. Sufficient data are available for other segments listed for TSS.

Table 3-3. Monitoring Stations for the 2003 TSS Sampling Program.

Site ID	Site Type	Description	Latitude	Longitude
06307600	Historic	Hanging Woman Creek near Birney, MT	45°17'57"	106°30'28"
06307740	Historic	Otter Creek at Ashland, MT	45°35'18"	106°15'17"
451732106085001	Historic	Otter Creek below Taylor Creek near Otter, MT	45°17'32"	106°08'50"
Pumpkin1	New	Pumpkin Creek near the mouth at the Tongue River 12-Mile Dam fishing access	46°14'49"	105°44'54"
0626300	Historic	Mizpah Creek near Mizpah, MT	46°15'39"	105°17'36"
Stump1	New	Stump Creek near the mouth	45°47'08"	105°03'08"
06307500	Current (Flow)	Tongue River at the TRR Dam near Decker, MT	45°08'29"	106°46'15"
06307610	Historic	Tongue River below Hanging Woman Creek near Birney, MT	45°20'19"	106°31'28"
06295250	Historic	Rosebud Creek near Colstrip, MT	45°46'03"	106°34'10"
06295110	Historic	Rosebud Creek at Kirby, MT	45°19'59"	106°59'10"

TBD = To be determined.

3.2.3 Temperature

Pumpkin Creek was listed for thermal modifications in 1996. A continuous temperature data logger will be installed in two segments of Pumpkin Creek to help characterize the water temperature of Pumpkin Creek on a daily basis. One data logger will be installed in a segment of the stream near the mouth with poor riparian characteristics (e.g., sparse woody vegetation) (Pumpkin1). A second data logger will be installed in an upstream segment of the river with good riparian conditions, approximately 1.6 miles upstream of the mouth (Pumpkin2). Temperature data loggers will also be installed in both Otter Creek and Hanging Woman Creek (Table 3-4).

Temperature data loggers will be encased in PVC pipe and installed in the stream segments in April 2003. The USGS maintains a continuous temperature data logger at the Tongue River near the mouth at Miles City, MT (06308500).

Table 3-4. Monitoring Stations for the 2003 Temperature Sampling Program

Site ID	Site Type	Description	Latitude	Longitude
06307740	Historic	Otter Creek at Ashland, MT	45°35'18"	106°15'17"
4517321060850001	Historic	Otter Creek below Taylor Creek near Otter, MT	45°17'32"	106°08'50"
Pumpkin1	New	Pumpkin Creek near the mouth at the Tongue River 12-Mile Dam fishing access	46°14'49"	105°44'54"
Pumpkin2	New	Pumpkin Creek approx. 1.6 miles upstream from the mouth	46°14'14"	105°42'53"
06307600	Historic	Hanging Woman Creek near Birney, MT	45°17'57"	106°30'28"
06307570	Historic	Hanging Woman Creek below Horse Creek near Birney, MT	45°08'02"	106°29'00"

TBD – To be determined.

3.2.4 Metals

3.2.4.1 Data Gaps

Additional data are needed to determine if beneficial uses in the Tongue River, Powder River, and Rosebud Creek watersheds are impaired because of metals. There are few recent data for several of the Section 303(d)-listed segments, and monitoring will fill the identified data gaps. Routine, synoptic water quality monitoring will include regularly scheduled grab samples to determine the following parameters:

- *Field parameter:* Flow and pH.
- *Laboratory parameters:* Hardness; water column total recoverable (TR) and dissolved samples of arsenic, cadmium, chromium, copper, iron, lead, nickel, selenium, silver, and zinc; and sediment sampling.

Grab samples for water column metals will be obtained once per month from April through September at the stations shown in Table 3-5. Sediment samples will be obtained one time during the 2003 sampling period.

Table 3-5. Monitoring Stations for the 2003 Metals Sampling Program

Site ID	Site Type	Description	Latitude	Longitude
06307600	Historic	Hanging Woman Creek near Birney, MT	45°17'57"	106°30'28"
06307740	Historic	Otter Creek at Ashland, MT	45°35'18"	106°15'17"
Pumpkin1	New	Pumpkin Creek near the mouth at the Tongue River 12-Mile Dam fishing access	46°14'49"	105°44'54"
06307610	Historic	Tongue River below Hanging Woman Creek near Birney, MT	45°20'19"	106°31'28"
06295110	Historic	Rosebud Creek at Kirby, MT	45°19'59"	106°59'10"
06295250	Historic	Rosebud Creek near Colstrip, MT	45°46'03"	106°34'10"

TBD = To be determined.
NA = Not available.

3.2.4.2 Source Assessment

There is not a good understanding of the sources of metals in the Tongue River, Powder River, and Rosebud Creek watersheds. The locations of some potential sources of metals, such as current and abandoned mines, and oil and gas wells, are well documented throughout the watershed. However, whether these potential sources are contributing significant loads of metals is uncertain. In 2003 major potential sources of metals will be evaluated using GIS, and state and local data. Monitoring will occur upstream and downstream of two to four potential sources of metals. Grab samples will be obtained once per month for the suite of metals described in Section 3.2.4.1.

3.2.5 Nutrients

3.2.5.1 Chemistry

Additional data are needed to determine if beneficial uses in the Powder River, Tongue River, and Rosebud Creek are impaired because of nutrients. There are few recent data for the Powder River and Rosebud Creek, and monitoring will fill the identified data gaps. Routine, synoptic water quality monitoring will include regularly scheduled grab samples to determine the following parameters:

- *Field parameters:* Temperature, flow, and dissolved oxygen (DO).
- *Laboratory parameters:* Total phosphorus (TP), soluble reactive phosphorus (SRP), nitrate plus nitrite (NO_2+NO_3), total Kjeldhal nitrogen (TKN), chlorophyll-*a*, and total nitrogen (TN, calculated from TKN and NO_2+NO_3).

Grab samples will be obtained once per month from April through September at the stations shown in Table 3-6. Nutrient and DO sampling will also occur to complement biological monitoring (see Section 3.3).

Table 3-6. Monitoring Stations for the 2003 Nutrient and DO Sampling Program

Site ID	Site Type	Description	Latitude	Longitude
06326520	Historic	Powder River at the mouth near Terry, MT	46°44'15"	105°25'43"
06326000	Historic	Powder River near Mizpah, MT	46°15'00"	105°16'00"
06325650	Historic	Powder River near Powderville, MT	45°45'08"	105°05'15"
06324710	Historic	Powder River at Broadus, MT	45°25'37"	105°24'05"
06326300	Historic	Mizpah Creek near Mizpah, MT	46°15'39"	105°17'36"
06307500	Current (Flow)	Tongue River at the TRR Dam near Decker, MT	45°08'29"	106°46'15"
06307600	Historic	Hanging Woman Creek near Birney, MT	45°17'57"	106°30'28"
06307740	Historic	Otter Creek at Ashland, MT	45°35'18"	106°15'17"
Pumpkin1	New	Pumpkin Creek near the mouth at the Tongue River 12-Mile Dam fishing access	46°14'49"	105°44'54"
06296003	Current (Flow)	Rosebud Creek at the mouth near Kirby, MT	46°15'53"	106°28'30"
06295250	Historic	Rosebud Creek near Colstrip, MT	45°46'03"	106°34'10"
06295110	Historic	Rosebud Creek at Kirby, MT	45°19'59"	106°59'10"

NA = Not available.

3.2.5.2 Source Assessment

There is not a good understanding of the sources of nutrients in the Powder River and Rosebud Creek. Sources will be identified through a field survey, GIS analysis, and state and local contacts. The source assessment for nutrients is outlined below.

- Identify the type and extent of agricultural practices throughout the Rosebud Creek and Powder River watersheds. This will be done in conjunction with the salinity source assessment analysis described in Section 3.2.2.
- Contact landowners about fertilizer use, application rates, and practices.
- Locate and define global positioning system (GPS) coordinates for point sources such as fisheries and wastewater treatment plants.
- Locate and define GPS coordinates for animal feeding operations (AFOs) and identify the type of facility.

The nutrient source assessment will begin in the summer of 2003 and will continue as part of the phased TMDL approach for nutrients in the Powder River and Rosebud Creek.

3.2.6 Multimeter Parameters

Measurements from a portable multimeter unit will be obtained at each site during the 2003 sampling program. EC, temperature, DO, and pH measurements will be obtained during each sampling event to complement the grab samples, and biological and physical monitoring. The multimeter will be calibrated daily according to the specifications of the unit.

3.3 Biology

Biological data can help determine aquatic life impairments in a river. If impairments are found, specific indicator species can point to the suspected causes of impairment. Biological surveys will include periphyton and benthic macroinvertebrate sampling in accordance with USEPA's Environmental Monitoring and Assessment Program (EMAP) protocols (EMAP 2002). Surveys will be conducted at the monitoring locations identified in Table 3-7 because there is a lack of current biological data for these streams. Biological data has been collected at several other sites throughout all three watersheds, and available data are summarized in the TMDL Status Reports.

Sampling will occur once at each station in June 2003. Biological data will be collected in a reach defined as approximately 40 times the average width of the river, but not less than 150 meters and no greater than 500 meters. Reaches defined for biological sampling will be at or near current water quality monitoring stations. Temperature, flow, EC, DO, and pH will be sampled with a multimeter at the time of all biological sampling.

In addition to the biological sampling, monthly water chemistry samples will be collected at the biological monitoring sites. Data will be collected so that the results from the biological sampling can be correlated to instream water concentrations of metals, nutrients, DO, and

suspended solids. Routine, synoptic water quality monitoring will include regularly scheduled grab samples to determine the following parameters:

- *Field parameters:* Temperature, flow, DO, pH, salinity, and EC.
- *Laboratory parameters:* nutrients (total phosphorus), SRP, $N0_2$+$N0_3$, TKN, TN (calculated); hardness (calculated); water column total recoverable (TR) and dissolved samples of arsenic, cadmium, chromium, copper, iron, lead, nickel, selenium, silver, and zinc; and TSS.
-

Grab samples will be obtained once per month from April through September at the stations shown in Table 3-7.

Table 3-7. Monitoring Stations for the 2003 Biological Sampling Program

Site ID	Site Type	Description	Lat	Long
06307600	Historic	Hanging Woman Creek near Birney, MT	45°17'57"	106°30'28"
06307740	Historic	Otter Creek at Ashland, MT	45°35'18"	106°15'17"
Pumpkin1	New	Pumpkin Creek near the mouth at the Tongue River 12-Mile Dam fishing access	46°14'49"	105°44'54"
06325550	Current	Little Powder River at the mouth near Broadus, MT	45°27'39"	105°19'39"

3.3.1 Macroinvertebrates

Benthic macroinvertebrate sampling will be conducted at the stations shown in Table 3-7 in accordance with EMAP SOP. Sampling will be coordinated to avoid periods of extremely high flow which can be unsafe and potentially disruptive to a macroinvertebrate system. Additional guidance from the EMAP SOP is shown below. The procedures for reach-wide, wadable, low-gradient streams will be followed. Samples will be collected at each of the 11 cross-section transects established. A habitat assessment will also be conducted at the time of sampling using the Montana Habitat Assessment Field Data Sheet.

> *A kick net sample is collected at each of eleven cross-section transects (established after the site is selected). Care should be taken to sample from a riffle that is as typical as possible for the stream type especially when it is not possible to use locally-generated reference data. It is best to avoid sampling near bridges, or crossings unless the purpose of the study is to examine the effects of these on the stream. There is evidence that the presence of lakes or impoundments on streams and rivers affects benthic invertebrate community composition; therefore sampling sites should be located as far from these as is practical. Sampling bedrock or large-boulder dominated riffles is best avoided, if practical.*

Data analysis will use provisional criteria established by MDEQ and draft metrics developed by Montana State University.

3.3.2 Periphyton

Periphyton sampling will be conducted at the stations shown in Table 3-7 in accordance with EMAP SOP. Sampling will be coordinated to avoid periods of extremely high flow which can be unsafe and potentially disruptive to a periphyton system. Additional guidance from the EMAP SOP is shown below. The procedures for wadable, low gradient streams will be followed. Sites will be located at or near the macroinvertebrate and water chemistry sampling sites.

> *Although stream periphyton may be assessed anytime of the year, the recommended time is summer (June 21 to September 21). This is a time of stable flows and peak periphyton diversity and standing crop in most Montana streams. Summer is also the season most amenable for field work in Montana and the season during which most reference data have been collected. High flows and turbid waters should be avoided because they limit access to and obscure visibility of the stream bottom. Assessments should be delayed for at least two weeks following high, bottom-scouring streamflows to allow for recolonization by algae and succession to a mature periphyton community. It may be necessary to sample outside the summer period to coincide with flows in ephemeral or dewatered streams, or to track seasonal changes in the biointegrity. When monitoring for trends from year to year, minimize the between-year variance by performing the assessments on or about the same date each year.*

3.4 Weather

Records from the nearest weather stations will be used to monitor local weather for the watersheds of interest. If a local weather station that can provide the appropriate information is not found, then an optional weather station capable of logging parameters such as temperature, barometric pressures, wind speed, precipitation, dew point, or solar radiation may be deployed. Precipitation data is available from USGS gages 06326500 (Powder River at Locate, MT) and 06308500 (Tongue River at Miles City, MT).

3.5 Flow

Instantaneous flows will be obtained during all sampling events with a Marsh-McBirney flow meter. Up to 20 cross-sectional measurements will be made at each site to ensure accurate flow readings with the meter. Standard calibration procedures for the meter will be followed each day. Some monitoring events will occur at USGS instantaneous flow gages (see Table A-3 in Appendix A). If possible, instantaneous flows will be obtained from the gage, real-time Internet data, or by contacting USGS personnel.

3.6 Physical Sampling

NRCS has completed extensive physical stream corridor assessments for the Tongue River and Powder River (NRCS, 2001a, 2001b, 2002a, 2002b). Additional physical stream data may be collected in the Tongue River and Powder River watersheds as part of the 2003 sampling

program. Physical stream data is currently not available for Rosebud Creek, and data will be collected in 2003 to fill any data gaps. The methodology for the 2003 physical sampling is shown below.

Physical surveys will include assessments of the instream habitat quality, near stream riparian habitat quality, and stream discharge. Stream discharge measurements will be conducted at all of the synoptic water quality sampling locations. Transects for the assessment will be established at evenly spaced intervals over the length of the reach (40 times the stream width) for up to five transects per reach. Additional detail on establishing a reach as well as the number and spacing of transects is provided in *Stream Channel Reference Sites: An Illustrated Guide to Field Technique* (USFS, 1994). The physical habitat quality assessment combines measurement data with professional judgments and ocular estimates of different characteristics of the channel; its morphology, hydrology, substrate types and distributions; bank conditions, cover conditions, and riparian qualities among other features. To complete this assessment, the following data will be collected:

- Measurements of stream width, depth, erosion potential, bank slope, bank stability, canopy cover, habitat types, substrate dominance and types, upper bank vegetation buffer width, and instream cover types.

- Primary attributes: habitat types, number of riffles, pool-to-riffle ratios, dominant substrate type (d50), percent gravel or larger particles, algae/macrophytes, instream cover types, and percent instream cover.

- Secondary attributes: stream bends, channel obstructions/modifications, channel flow status, stream width, stream depths, and velocity.

- Tertiary attributes: riparian zone, natural vegetative buffer, aesthetics, percent riparian vegetation, bank slope, bank erosion, tree canopy, dominant vegetation, and width of buffer.

Because of the nature of the survey, physical surveys will be conducted where there is landowner permission and reasonable access.

4.0 TONGUE RIVER RESERVOIR MONITORING

Additional data are needed to determine whether beneficial uses in the Tongue River Reservoir are impaired because of nutrients, organic enrichment, low DO, algal growth/chlorophyll-*a*, and TSS. Monitoring in the reservoir will be conducted in 2003 from April (lake thaw) to September (lake freeze). New and current USGS sampling sites will used to monitor the reservoir, these include:

- Tongue River inflow: USGS station 06306300 (Tongue River at the WY-MT state line).
- TRReservoir outflow: USGS station 06307500 (Tongue River at the Tongue River Dam near Decker, MT).
- TRR: riverine zone.
- RR: transition zone.
- TRR: lacustrine zone.

Routine, synoptic water quality monitoring at the Tongue River inflow and outflow sites will include regularly scheduled grab samples for the parameters shown below. Grab samples will be obtained once per month at the inflow and outflow stations.

- *Field parameters:* Temperature, DO, pH, and EC.
- *Laboratory parameters:* TP, SRP, NO_2+NO_3, TKN, TN (calculated), ammonia, chlorophyll-*a*, and TSS.

Reservoir sampling will include water column profiles and grab samples at various depths at all three stations. The sampling plan is outlined below. Samples will be obtained once per month, and three different depths will be obtained at each site. The depth of each sample will depend on lake stratification conditions at the time of sampling.

- Water column profiles (surface sample and then one meter intervals): Temperature, DO, pH, and EC.
- Water column grab samples (one meter below the surface, midpoint, and one meter from the bottom) – TO, SRP, ammonia, NO_2+NO_3, TKN, TN (calculated), and TSS.
- Secchi disk depth at all three stations.
- Composite sample of chlorophyll-*a* in the euphotic zone at all three stations.

5.0 EQUIPMENT

Equipment potentially needed for all data gathering efforts is listed in Tables 5-1 through 5-7.

Table 5-1. General Items

QTY	ITEM
10	Soft (#2) lead pencils
10	Fine-tip indelible markers
2	Packages clear tape strips
1	Rolls plastic electrical tape/duct tape
1	Pocket knife, with at least two blades
1	Scissors
1	Pocket-sized field notebook (optional)
1	Package Kim wipes in small self-sealing plastic bag
1	Copy Field operations and methods manual
1	Map with AX-site@ marked
1	Field notebook
2	Clipboards
2	Boxes rubber gloves
10	Shipping airbills and adhesive plastic sleeves

Table 5-2. Water Chemistry/Monthly Sampling Supplies

Qty/site	ITEM
1	Cooler for transporting samples
---	Bags of ice
2	Safety glasses
1	Sample containers (supplied by lab)
1	Sample preservatives (supplied by lab)
1	Clear tape strip for covering label
1	GPS receiver and operating manual (set to NAD 27; measure in decimal degrees)
4	Extra batteries for GPS
1	Digital camera
1	Horiba meter (for measuring DO, EC, temperature, pH)
1	DO repair kit (membranes, filling solution)
2	Rinse bottles
1	Acid waste container labeled Awaste@ for disposing of preservatives
1	Carboy of deionized water
1	500-mL bottle of ph calibration solutions (2 point calibration)
1	500-mL bottle of conductivity calibration solution
1	Site visit form to record results
1	Sheet of site visit codes (supplied by MDEQ)
1	Velocity meter (Marsh Mc-Birney Model 201) with operating manual
1	Top-set wading rod (metric scale) for use with meter
2	Pieces of rebar to attach measuring tape
2	Measuring tapes in meters and inches, 200m and 100m long
1	Discharge form (supplied by MDEQ)
1	Datalogger (Hobo)
1	Stabilizing device (concrete, rebar)
1	Items to download from recorder
1	PVC to protect datalogger

Table 5-3. Equipment for Lake Sampling

QTY	ITEM
1	Boat
1	Depth Finder
1	GPS Unit
4	Spare batteries for the GPS
1	Gloves
1	Cubitainer, 4-L (1 per site)
	Ice in self-contained bags
1	Cooler to store samples
1	Van Dorn with 25-foot line and messenger
1	1-L wash bottle (with deionized water)
1	Horiba meter with 25-foot cord
1	Lake sample form per site
1	Chlorophyll box:
1	Filter apparatus with filter installed
1	Hand pump with tubing
1	Box of filters (Whatman GFF) in self-sealing plastic bag
1	Forceps in bag with filters
1	Graduated cylinder (100 mL)
1	Graduated cylinder (250 mL)
1	Squares of foil in plastic bag
1	Secchi disk

Table 5-4. Equipment and Supplies for Periphyton Sampling

QTY	ITEM
1	Large funnel (15-20 cm diameter)
1	12-cm^2 area delimiter (3.8 cm diameter PVC pipe, 3 cm tall)
1	Stiff-bristle toothbrush with handle bent at 90° angle
1	1-L wash bottle labeled ASTREAM WATER@
1	1-L wash bottle labeled for and containing deionized water
1	500-mL plastic bottle (with volume markings) for composite index samples, labeled APERIPHYTON COMPOSITE SAMPLE@
1	35-60 mL catheter-tipped plastic syringe
4	50-mL screw-top centrifuge tubes
1	Box glass-fiber filters for chlorophyll and biomass samples
1	Pair forceps for filter handling
1	25-mL or 50-mL graduated cylinder
1	Filtration unit, including filter funnel, cap, filter holder, and receiving chamber
1	Hand-operated vacuum pump and clear plastic tubing
1	Small lightproof plastic bags for storing chlorophyll and biomass samples
2	Self-sealing plastic bags for chlorophyll and biomass samples
	4 mL 10% formalin or Lugols solution for ID/enumeration samples
1	Small syringe or bulb pipette for dispensing formalin
1	Pair chemical-resistant gloves for handling formalin
1	Pair safety glasses for use when handling formalin
2	Sets sample labels (4 per set) with the same barcode ID number
1	Sample Collection Form for site (Algae Form)

Table 5-5. Equipment and Supplies for Benthic Macroinvertebrate Sampling

QTY	ITEM
1	Modified kick net (D-frame with 500-µm mesh) and 4-ft handle (Wildco #425-C50)
1	Spare net(s) and/or spare bucket assembly for end of net
2	Watch with timer or a stopwatch
1	Sieve with 500-µm mesh openings
1	Sieve-bottomed bucket, 500-µm mesh openings
2	Pair watchmaker's forceps
1	Wash bottle, 1-L capacity labeled ASTREAM WATER@
1	Small spatula, spoon, or scoop to transfer sample
1	Funnel, with large bore spout
___	Sample jars, HDPE plastic with screw caps, 500-mL and 1-L capacity, suitable for use with ethanol
2	Gallon 95% ethanol, in a proper container
2	Pair butyl rubber gloves, heavy rubber
1	Cooler (with suitable absorbent material) for transporting ethanol and samples
2	Benthic sample labels
6	Blank labels on waterproof paper for inside of jars
1	Sample Collection Form for site (RBP Assessment Form)

Table 5-6. Equipment and Supplies for Physical Habitat Sampling

QTY	ITEM
1	Fisherman's vest with lots of pockets
1	50-meter tape measure (should have for discharge)
1	Clinometer
1	Measuring tape for measuring sinuosity (should have for discharge)
1	Measuring rod
3	Physical habitat forms (slope, sinuosity, Rosgen classification) from MDEQ
1	Rosgen book for reference

Table 5-7. Personal Gear

QTY	ITEM
1	Pair chest waders
1	Sunglasses
1	First aid kit
1	Rain gear
1	Fisherman's vest for physical habitat characterization
1	Day pack
1	Insect repellent, sunscreen
1	Patch kit for waders

REFERENCES

EMAP (Environmental Monitoring and Assessment Program). 2002. Surface Waters: Western Pilot Study Field Operations Manual for Wadeable Streams. Peck, D.V., J.M. Lazorchak, and D.J. Klemm (editors). Unpublished draft. U.S. Environmental Protection Agency, Washington, DC.

NRCS (National Resources Conservation Service). 2001a. *Powder River and Tongue River Stream Corridor Assessment. Montana Reaches. Phase I – Rapid Aerial Assessment*. U.S. Department of Agriculture, Natural Resources Conservation Service, Helena, Montana.

NRCS (National Resources Conservation Service). 2001b. *Tongue River and Tongue River Stream Corridor Assessment. Montana Reaches. Phase I – Rapid Aerial Assessment.* U.S. Department of Agriculture, Natural Resources Conservation Service, Bozeman, Montana.

NRCS (National Resources Conservation Service). 2002a. *Powder River Stream Corridor Assessment. Montana Reaches. Phase II – Physical Habitat Assessment.* U.S. Department of Agriculture, Natural Resources Conservation Service, Bozeman, Montana.

NRCS (National Resources Conservation Service). 2002b. *Tongue River Stream Corridor Assessment. Montana Reaches. Phase II – Physical Habitat Assessment.* U.S. Department of Agriculture, Natural Resources Conservation Service, Bozeman, Montana.

USEPA (U.S. Environmental Protection Agency). 2001. Field Operations Manual for Wadeable Streams. Need specifics.

USEPA (U.S. Environmental Protection Agency). 1999. *Rapid Bioassessment Protocols for Use in Streams and Wadeable Rivers: Periphyton, Benthic Macroinvertebrates and Fish, Second Edition*. EPA 841-B-99-002. U.S. Environmental Protection Agency, Office of Water, Washington, DC.

USFS (U.S. Forest Service). *1994. Stream Channel Reference Sites – An Illustrated Guide to Field Techniques*. General Technical Report RM-245. U.S. Department of Agriculture, U.S. Forest Service, Rocky Mountain Forest and Range Experiment Station. Fort Collins, Colorado.

Appendix A – Monitoring Activities and Frequencies

Table A-1. Sampling Activities for 2003 at the Proposed Monitoring Locations

Site ID	Site Description	Salinity/TDS/ SAR	TSS	Temp	Metal	Nutrient	Macro	Periphyton	Flow
Powder River Watershed									
Stump1	Stump Creek near the mouth	M	M						M
06325500	Little Powder River at the mouth near Broadus, MT						X	X	M
06326300	Mizpah Creek near Mizpah, MT	M	M			M			M
06326520	Powder River at the mouth near Terry, MT					M			M
06326000	Powder River near Mizpah, MT					M			M
06325650	Powder River near Powderville, MT					M			M
06324710	Powder River at Broadus, MT					M			M
Rosebud Creek Watershed									
06296003	Rosebud Creek at the mouth near Rosebud, MT					M			M
06295250	Rosebud Creek near Colstrip, MT	M	M		M	M			M
06295110	Rosebud Creek at Kirby, MT	M	M		M	M			M
Tongue River Watershed									
06307600	Hanging Woman Creek near Birney, MT	M	M	C	M	M	X	X	M
06307570	Hanging Woman Creek below Horse Creek near Birney, MT	M		C					M
06307740	Otter Creek at Ashland, MT	M	M	C	M	M	X	X	M
451732-106085001	Otter Creek below Taylor Creek near Otter, MT	M	M	C					M
Pumpkin1	Pumpkin Creek near the mouth at the Tongue River 12-Mile Dam Fishing access	M	M	C	M	M	X	X	M
Pumpkin2	Pumpkin Creek approx. 1.6 miles upstream of Hwy. 332			C					M
06307610	Tongue River below Hanging Woman Creek near Birney, MT		M		M				M
06307500	Tongue River at the TRR Dam	M	M			M			C
Salinity Source Assessment									
NewX	Multiple sites to characterize source salinity	C							C
T&Y	T&Y irrigation ditch	M							M

C = Continuous, M = Monthly, X = Once, Yellow = Sampled to complement biology sampling.

Table A-2. Summary of the 2003 USGS Sampling Program

Station Number	Station Name	Continuous Real Time Data				2003 Water Chemistry
		Discharge	Temperature	EC	Precipitation	
06325500	Little Powder River at the mouth near Broadus, MT					✔
06324970	Little Powder River above Dry Creek near Weston, WY	✔				✔
06326500	Powder River near Locate, MT	✔			✔	✔
06324500	Powder River at Moorhead, MT	✔		✔		✔
06317000	Powder River at Arvada, WY	✔				✔
06298000	Tongue River near Dayton, WY	✔				✔
06306300	Tongue River at the MT-WY border	✔		✔		✔
06307500	Tongue River at the TRR Dam near Decker, MT	✔				
06307830	Tongue River below Brandenburg Bridge near Ashland, MT	✔		✔		✔
06308500	Tongue River at Miles City, MT	✔	✔		✔	
06296003	Rosebud Creek at the mouth near Rosebud, MT	✔				✔

Table A-3. Time Line of Proposed Monitoring Activities and Frequency of Monitoring Activities

Sampling Type	Apr	May	Jun	Jul	Aug	Sep	Oct	Nov	Dec	Extended (2004-2006)
Salinity/TDS/SAR	1	1	1	1	1	1				
TSS	1	1	1	1	1	1				
Temperature	C	C	C	C	C	C				
Metals	1	1	1	1	1	1				
Nutrients/DO	1	1	1	1	1	1				
Macro			1							
Periphyton			1							
Salinity Source Assessment	C	C	C	C	C	C	C	C	C	C
Nutrients Source Assessment	C	C	C	C	C	C	C	C	C	C

C = Continuous.

APPENDIX B – Monitoring Locations

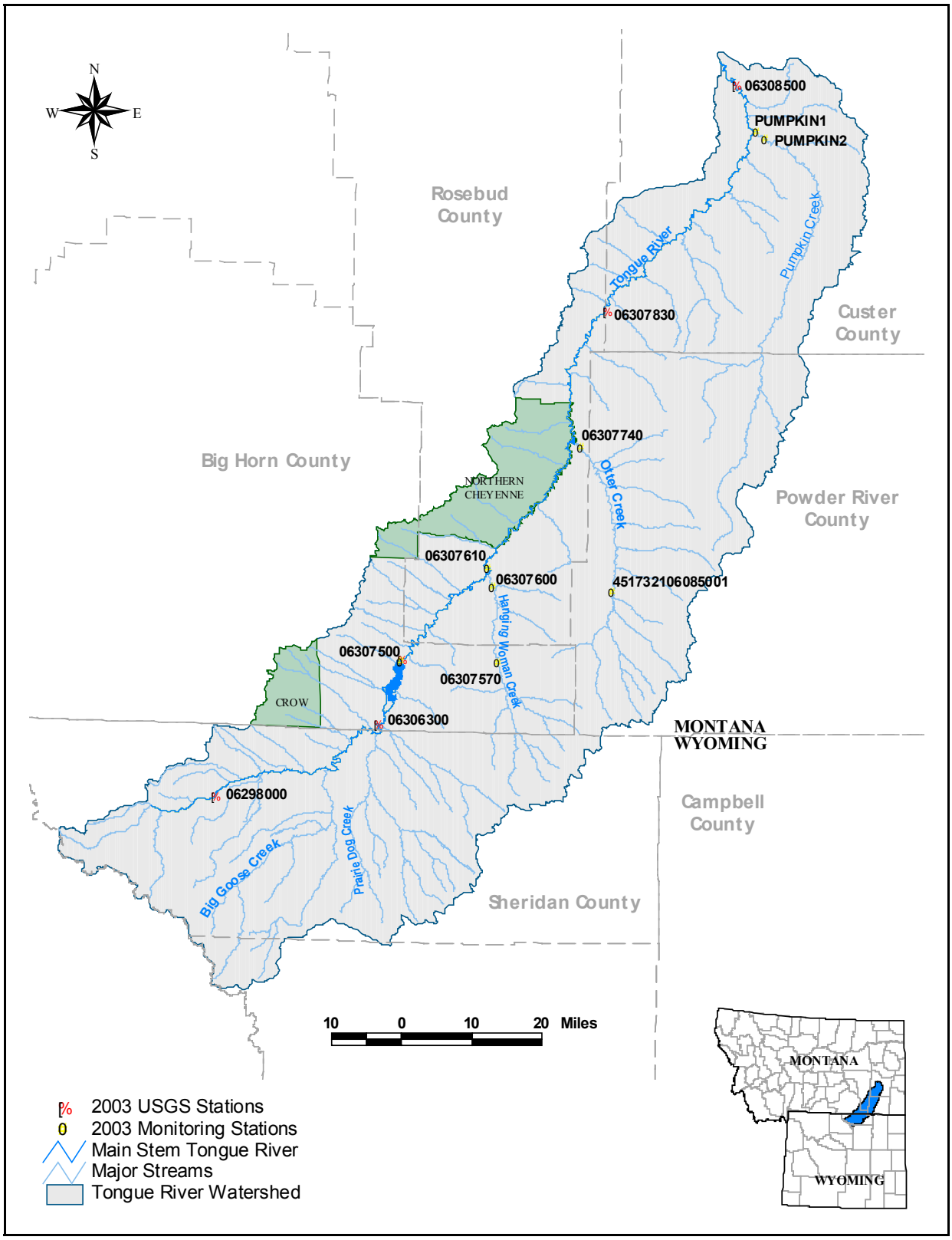

Figure B-1. Location of the 2003 Tongue River watershed monitoring stations.

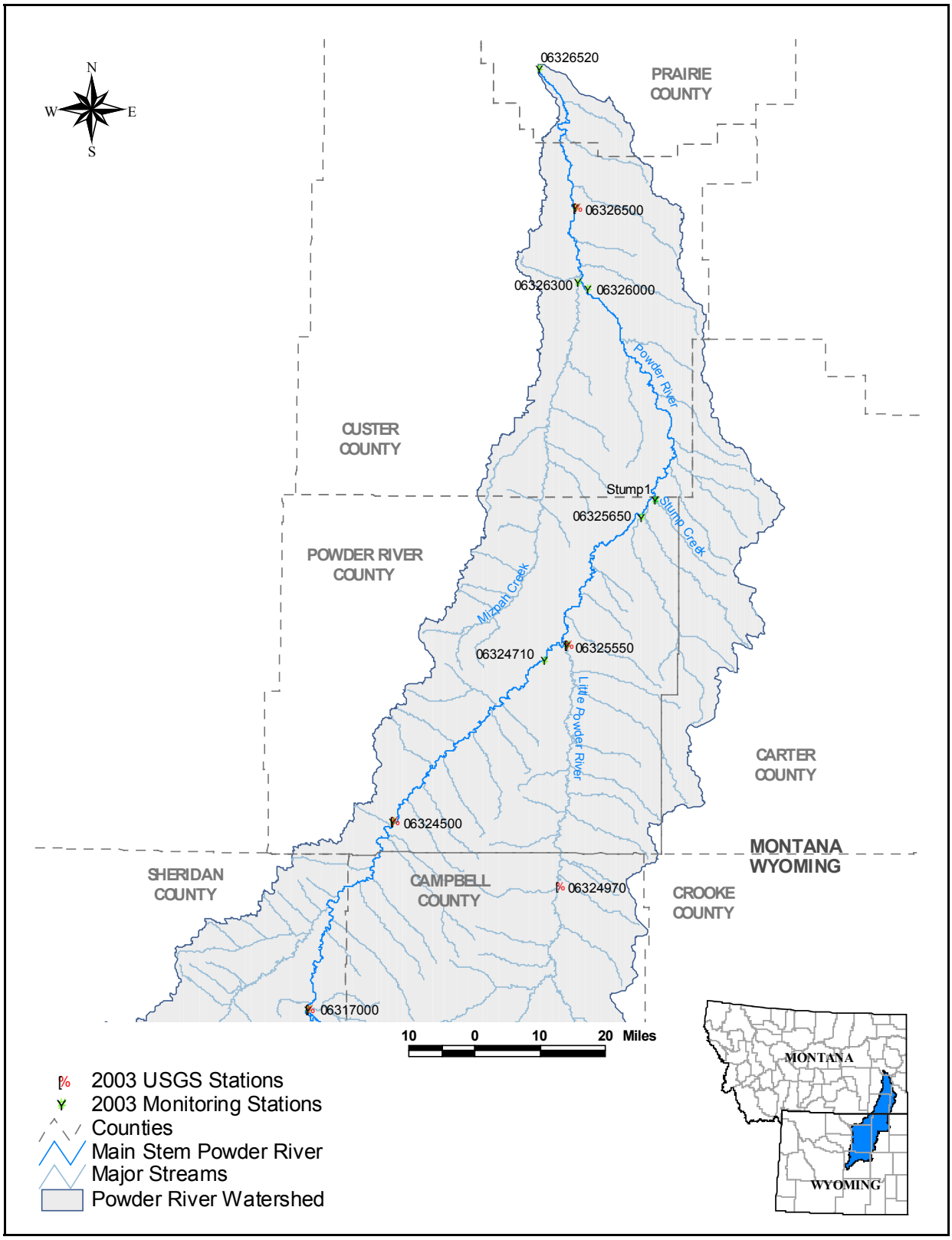

Figure B-2. Location of the 2003 Powder River watershed monitoring stations.

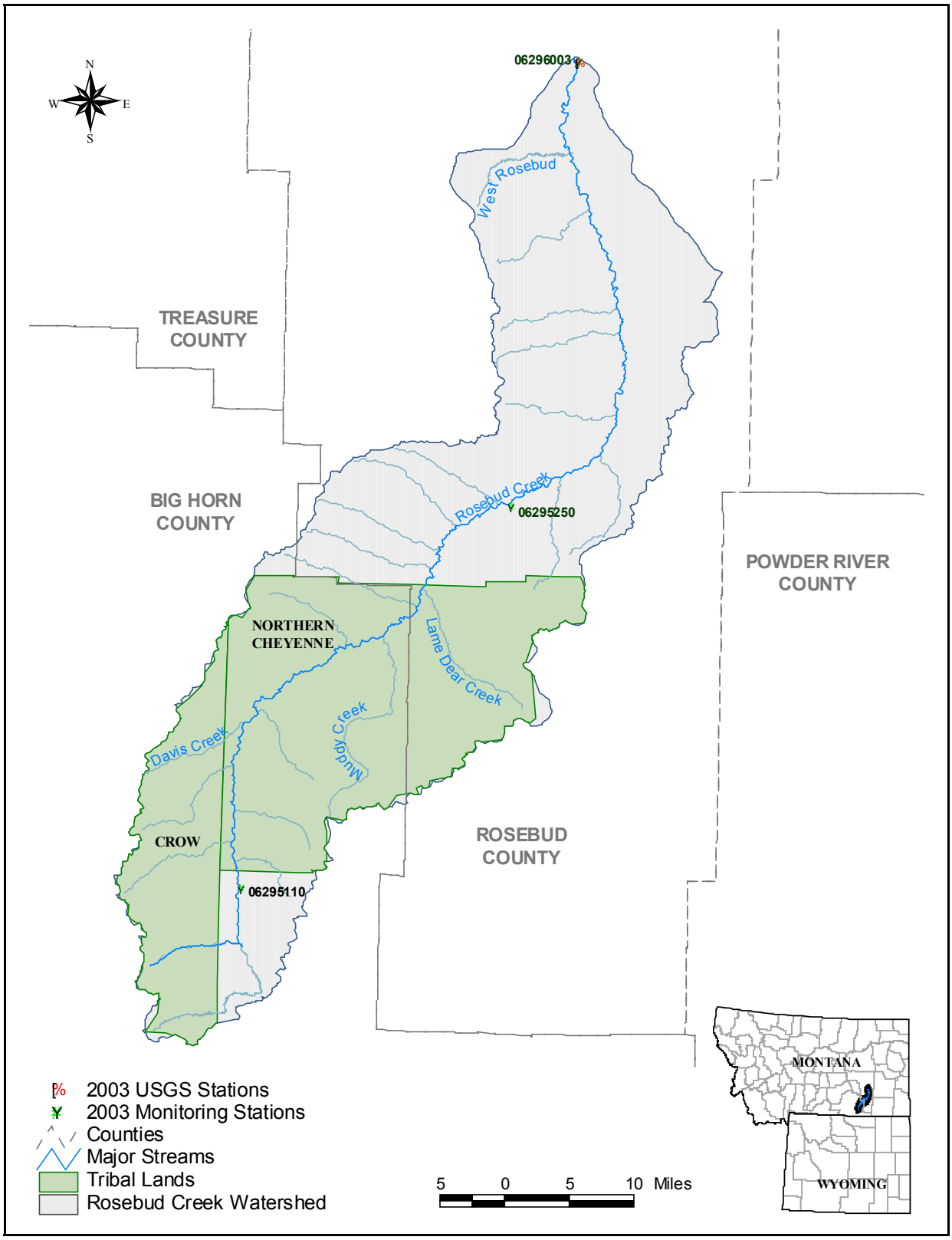

Figure B-3. Location of the 2003 Rosebud Creek watershed monitoring stations.

APPENDIX C – Data Forms

Place Site Visit Label Here

Site Visit Form

(One Station per page)

STORET Project ID:_____

Trip ID:_____ Date:_____

Personnel: _____

Waterbody Name _____ County _____ HUC _____

Station ID _____ Visit # _____ Location _____

Lat _____ Long _____ Verified? ☐ By _____ GPS Datum (Circle One): NAD 27 NAD 83 WGS84

Lat/Long obtained by method other than GPS? Y ☐ N ☐ If Y what method used? If by map what is the map scale? _____

Samples Taken:			**Sample ID/File Location:**	**Sample Collection Procedure**
Water	☐	Nutrients ☐ Metals ☐ Commons ☐		GRAB
Sediment	☐			SED-1
Macroinvertebrate	☐	Macroinvertebrate Habitat Asmt. ☐		KICK HESS OTHER:
Algae/Macrophytes	☐	Aquatic Plant Form ☐		PERI-1 OTHER:
Chlorophyll a	☐			CHLPHL-2 OTHER:
Habitat Assessment	☐	Stream Reach Asmt. ☐ Other ☐		**Purpose:**
Substrate	☐	Pebble Count ☐ % Fines ☐		
Transect	☐			
Photographs	☐			
Field Notes	☐			
Other				

Measurements:	**Time:**	
Q / Flow (cfs)		Est. ☐
Temp: (°C)	W	A
pH:		
SC: (mS/cm)		
SC x 1000 =		µmho/cm
DO: (mg/L)		
TUR: Clear ☐ Slight ☐ Turbid ☐ Opaque ☐		
Turbidity Comments:		

Macroinvertebrate Kick Duration:	Kick Length (Ft.):
Site Visit Comments:	

Revised 3/2003 DMA

Field Data Sheet Instructions

- Place a Site Visit Code label in the upper left corner.
- STORET Project ID: Enter the Project ID assigned by the Data Management Section. If you do not know this information contact Data Management.
- Trip ID: Enter the Trip ID assigned by the Data Management Section. If you do not know this information contact Data Management.
- Date: Enter the date of the station visit.
- Personnel: Enter the name(s) of the personnel sampling.
- Waterbody Name: Enter the name of the waterbody such as "Missouri River."
- County: Enter the county in which the station resides.
- HUC: Enter the hydrologic unit code (HUC) the station falls within.
- Station ID: Enter the STORET Station ID the Data Management Section established for the site.
- Visit #: Leave this field blank.
- Location: This is an opportunity to expand on the waterbody name. Such as "upstream from bridge on Forest Service road 100" rather than just "Coal Creek". When the station details are entered into STORET a combination of the Waterbody Name and Location will be used for the Station Name.
- Lat/Long: Latitude and longitudes should be obtained in decimal degrees through a GPS unit reading NAD27 whenever possible. If this is not possible a latitude/longitude obtained through map interpolation or a mapping program is acceptable as long as the map datum (e.g., NAD27, WGS84) the Web site uses is circled on the field form. If the latitude/longitude is derived from a topographic map, the map scale (e.g., 1:24,000) should be noted on the form. Also note in the "Comments" field the reason a GPS reading was unavailable.
- Verified: Latitudes and longitudes should always be verified upon return from the field. They can be verified by plotting them on a paper map or using a mapping Web site. Once the latitude/longitude has been verified check the "Verified" box and put your initials in the space next to "By".

  If when verifying the latitude/longitude it is determined that the measurement must be corrected please note the correct latitude/longitude in the comment field along with what method was used to arrive at this "corrected" latitude/longitude. Do not erase or dispose of the original latitude/longitude reading. Draw a single line through the original reading and put your initials. If a map is used to generate the latitude/longitude, the map scale, such as 1:250,000; and the map datum, such as NAD27, are needed.
- GPS Datum: Circle the GPS Datum your GPS unit is set to read. Data management would like to have all GPS units set to read NAD27 for consistency.

- Latitude/longitude obtained by method other than GPS? Check Yes or No. If Yes, describe what method was used to obtain the latitude/longitude. If a mapping Web site was used, note the datum the Web site uses.
- Samples Taken: Check the boxes next to each type of sample if you collect that type of sample during your station visit. Also check off the type of habitat assessments you complete during your station visit.
- Sample ID/File Location: Write the Activity ID (Sample ID) for each of the samples you collect in the field. Alternately, if the habitat assessments are processed into an electronic format, note the file location.
- Sample Collection Procedure: Circle the sample collection procedure you used to obtain each sample type. The Sample Collection Procedures listed on the form are MDEQ procedures. To ensure you are using the correct MDEQ procedures check the Monitoring & Data Management Bureau SOP manual.
- Field Measurements: Record your field measurements in the spaces provided.
- Comments: Use the Comments field to record comments about the GPS reading, any additional samples that were taken such as bacteria, or other notes.

CHANNEL CROSS-SECTION

Date:		Site Visit Code:	
Waterbody:	MIZPAH CREEK	Site ID:	Y20MZPHC01
Personnel:		Trip ID:	2003-YELS
Project ID:	TMDL-Y20	Survey Equipment: (Laser/Other):	

	STATION	DEPTH	CELL WIDTH	MEAN CELL DEPTH	CELL AREA	NOTATION
	(reading taken from the tape across the cross section)	(vertical distance from streambed to elevation @ bkf)	(e.g.: STATION 2 -STATION 1)	e.g.: 1/2(DEPTH 1+ DEPTH 2)	(CELL WIDTH X MEAN CELL DEPTH)	*(e.g.: Lbkf, LWE,THWG,RWE, Rbkf)
1						
2						
3						
4						
5						
6						
7						
8						
9						
10						
11						
12						
13						
14						
15						
16						
17						
18						
19						
20						
21						
22						
23						
24						
25						
26						
27						
28						
29						
30						
31						
32						
33						
34						
35						
		TOTAL CROSS-SECTIONAL AREA:				

* Notations: Lbkf: Left bankfull, Rbkf: Right bankfull, LWE: Left Water Edge, RWE: Right Water Edge, THWG:Thalweg

AQUATIC PLANT FIELD SHEET

Date: Site Visit Code:

Waterbody STORET Station ID:

Personnel:

Purpose: The purpose of completing this form is to estimate the percent of wetted substrates at the sampling site covered by each of the major categories of aquatic plants, to record the relative amount of accumulated growth in each category, and to note the general color and condition of plants in each category. This information will help to describe the health and productivity of the aquatic ecosystem, define nuisance aquatic plant problems, identify potential sources and causes of pollution, and document changes in the plant community over time.

Type of plant growth	Cover (%)	Amount of growth	Color	Condition
Microalgae				
Macroalgae				
Mosses				
Macrophytes				
Bare substrate				
Total	100 %			

Substrates present (please rank):

rock: _____

wood: _____

sediment: _____

other (list): _____

1) _____

2) _____

3) _____

4) _____

5) _____

Explanation and Definitions

Cover: Estimate the percent of wetted substrate area colonized by each of the plant categories listed, and the percent area that is not colonized by any plants (see **Bare Substrate**, overleaf). Also, rank the types of substrates that are available for colonization by plants (1 = substrate accounting for the most area, etc.).

Amount: Record the relative amount of plant growth in each category as being **light**, **moderate**, or **heavy**. **Light** growth barely covers the substrate surface and is not immediately evident. **Heavy** growth extends almost to the water surface or beyond. **Moderate** growth is intermediate between light growth and heavy growth.

Color: The colors of aquatic plants are clues to their identity and to the health of aquatic ecosystems. Plant colors may span the spectrum of hues in the rainbow (see **Microalgae** below). Record the predominant color of the plants in each of the categories present.

Condition: Aquatic plants go through seasonal cycles of growth, maturity, and decay. The condition of a plant or group of plants will indicate the stage of this seasonal cycle. **Growing** plants show new growth and bright colors. **Mature** plants are larger but have more subdued colors because of age, epiphytes and sediment deposits. **Decaying** plants display a loss of both pigmentation and physical integrity. Enter **growing**, **mature**, or **decaying**.

Microalgae: Microalgae are microscopic algae appearing as pigmented accumulations attached to or resting upon submerged surfaces. This category commonly includes diatom "slimes" and films of green, blue-green, or euglenoid algae in depositional areas. Colors may range through shades of yellow, red, brown, green, blue and black. Included here are accumulations of "sewage fungus" (tan-gray) below sources of organic pollution, "yellow boy" (yellow-orange) below mine adits, and iron bacteria (orange-brown) in groundwater seeps and springs.

Macroalgae: Macroalgae are macroscopic algae whose individual plants or colonies are visible to the unaided eye. Macroalgae may be free-floating, or they may be attached to or resting upon submerged surfaces. Examples of macroalgae include filamentous growth forms (*Cladophora*, *Spirogyra*, *Ulothrix*), plant-like algae with leaf-like structures (*Chara*, *Nitella*), compact round or flattened colonies (*Nostoc*, *Rivularia*), gelatinous masses (*Chaetophora*, *Tetraspora*), and short, tubular strands (*Lemanea*). Color is highly variable, as it is with the microalgae.

Moss: Mosses are primitive plants that are intermediate in complexity between algae and higher plants. Mosses are common in cold-water habitats in western Montana. Mosses are typically green in color; the shade of green varies with plant vigor and the amount of sediment accumulation.

Macrophytes: Macrophytes or "higher plants" are distinguished from algae and mosses by their larger size and by the presence of true leaves, roots and flowers. Rooted macrophytes typically colonize areas of sediment deposition. Macrophytes may be free-floating (duckweed), submergent (pondweed), or emergent (cattails, bulrush, water lily).

Bare Substrate: Substrates may be void of plant growth because of toxic or sterile conditions or because of recently scoured or unstable substrates. Rocks in mountain lakes and streams may appear to be barren at first glance, but closer examination often reveals a very thin film of diatoms (microalgae) that feels slippery or slimy to the touch. Similarly, nearshore sediment deposits that have not been disturbed for several days will usually develop a film of microalgae. **Examine these substrates closely.**

SUBSTRATE DEQ/MDM

Date: **Site Visit Code:**

Waterbody: **STORET Station ID:**

Personnel:

PEBBLE COUNT								
Row ID	Particle Category		Size (mm)	Riffle Count	(Other) Count	*Characteristic Group: PEBL-CNT*		
						Sum	% of Total	Cum. Total
1	Silt / Clay		< 1			0		0.00%
2	Sand		1 - 2			0		0.00%
3	Very Fine	GRAVELS	2 - 4			0		0.00%
4	Fine		4 - 6			0		0.00%
5	Fine		6 - 8			0		0.00%
6	Medium		8 - 12			0		0.00%
7	Medium		12 - 16			0		0.00%
8	Coarse		16 - 22			0		0.00%
9	Coarse		22 - 32			0		0.00%
10	Very Coarse		32 - 45			0		0.00%
11	Very Coarse		45 - 64			0		0.00%
12	Small	COBBLES	64 - 90			0		0.00%
13	Small		90 - 128			0		0.00%
14	Large		128 - 180			0		0.00%
15	Large		180 - 256			0		0.00%
16	Small	BOULDERS	256 - 362			0		0.00%
17	Small		362 - 512			0		0.00%
18	Medium		512 - 1024			0		0.00%
19	Large		1024 - 2048			0		0.00%
20	Bedrock		> 2048			0		0.00%
21	Total # Samples			0	0	0	0.00%	

Chain of Custody

Project or Site Name

Project Number

Sampler Name (Printed)

Contact Name

CHAIN OF CUSTODY RECORD

NORTHERN
Analytical Laboratories, Inc.

602 South 25th Street
Billings, Montana 59101
Ph: 406-254-7226 • Fax: 406-254-1389

Report to (Firm or Agency)

Address

City State Zip

Phone Fax

DATE COLLECTED	TIME COLLECTED	SAMPLE LOCATION OR DESCRIPTION	COMP OR GRAB	SAMPLE MATRIX	NO. OF CONTAINERS	ANALYSIS REQUIRED							NOTES	LAB NUMBER

Relinquished by:	Date	Time	Received by:
Relinquished by:	Date	Time	Received by:
Relinquished by:	Date	Time	Received by:

Appendix B

Montana DEQ Standard Operating Procedures

(Sections 10 and 11)

10.0 Sample Collection

Sample collection is a vital part of the composition of waters and wastewaters studies. It is often the major source of error while obtaining water quality information. In any study involving small samples of a material, inherent uncertainties exist related to the homogeneity of the sampled source, the number and frequency of the samples collected, the method of collection, and the size of the individual samples.

The most important factors affecting the ability to adequately determine the composition of water over a period of time are the methods and frequencies of sample collection.

10.1 SAMPLE COLLECTION METHODS

The three general types or methods of sample collection are:

A. The grab sample. This is an individual discrete sample collected over a period of time not exceeding 15 minutes.

B. The simple composite sample. It is collected by combining equal volumes of two or more grab samples collected at a fixed interval of time.

C. The proportioned composite sample. The volumes or collection frequencies of the grab samples combined vary with flow.

The choice of collection method is usually dictated by the circumstances surrounding the sample site and the objectives of the monitoring program. Some guidelines governing the selection of a sample collection method are:

1. A grab sample will adequately represent the flow at the time it is collected if it is known or can be determined that a source is uniform in composition (homogenous). For most dissolved constituents, some degree of homogeneity is common. For constituents that may be associated with suspended material, a single grab sample may be a very poor representation of the source being sampled.

2. A composite sample will accurately represent the water in a vertical cross section of a stream by combining appropriate volumes of samples taken at a series of points along the cross section, and will be used if the source is not known or not believed to be homogenous. For suspended sediment or associated constituents, a composite sample will better represent the quality of the water. The number of samples to be collected for compositing relates primarily to the representativeness of the composite sample and secondarily to the volume of the sample required for analysis.

3. Water stored in lakes and reservoirs is commonly not uniformly mixed. Thermal stratification and associated changes in water composition are among the most commonly observed effects. Single grab samples from lakes or reservoirs can be assumed to represent only the spot within the water body from which they came.

4. The collection of a grab sample is appropriate when the sample:

a) Characterizes water quality at a particular time;
b) Provides information about minimum and maximum concentrations;
c) Allows collection of variable sample volume;
d) Corroborates composite samples; and
e) Meets a requirement of a discharge permit.

5. Grab samples will be used when:

a) The stream does not flow continuously;
b) Water or waste characteristics ar e relatively constant;
c) Variables to be analyzed are likely to change with storage (dissolved gases, residual chlorine, soluble sulfide, oil and grease, microbiological parameters, organics, and pH);
d) Information on the maximum and minimum concentrations or variability of concentrations is desired;
e) The history of water quality is to be established based on relatively short-time intervals; and
f) Spatial variability is to be determined, for example, throughout the cross section and/or depth of a stream or a large body of water.

6. Composite samples will be used when:

a) Determining average concentrations; and
b) Calculating mass/unit time loading.

7. The method of sample collection used in DEQ Compliance Monitoring is usually specified in the permit. The DEQ Compliance Sampling Manual shows that sampling programs must include a minimum of a 24-hour operating day composite supplemented by two or more grab samples. With highly

variable wastewater characteristics or flow rate changes, additional sampling is required. A composite sample is defined as a minimum of eight discrete samples taken, proportional to flow, over the compositing period.

8. Composite samples from lagoons with long detention times may not be representative due to the tendency of lagoons to short circuit. Grab samples may be representative of lagoon discharges.

9. Agricultural discharges (concentrated animal waste or manure from a confined feedlot, runoff from an agricultural watershed, and irrigation return flows) are usually highly variable. A single grab sample may not be representative. A series of grab samples, or a flow-proportioned composite sample, would be best.

10. Biological samples (benthic macroinvertebrate and periphyton) may or may not be composited, depending on a study's objectives.

11. Composite samples will never be collected for microbiological examination. Data from individual samples show a range of values which composite samples will not display. Also, one or more portions that make up a composite sample may contain toxic or nutritive material and cause incorrect results.

10.2 SAMPLE COLLECTION FREQUENCY

When a sampling point has been selected and a procedure adopted that ensures that each sample adequately represents the water flowing at that instant, a decision is needed about how frequently samples or measurements must be obtained. The usefulness of water quality data and the ability to interpret water quality data is often tied directly to sampling frequency. A few of the more important factors to consider in determining sampling frequency are:

A. Types of variables to be measured. Flow dependent variables (suspended solids or associated constituents) might be sampled more frequently during periods of sediment transport than during low-flow periods. Some water quality variables (temperature, dissolved oxygen, and pH) may require diel sampling to define the expected ranges.

B. Expected seasonal changes. Seasonal changes are manifested by changes in flow, storm periods with attendant runoff, rising and falling water temperatures, increased or decreased biological growth, etc.

C. Influence of man-caused inputs. Anthropogenic activities may be characterized by daily cycles (quality of a wastewater discharge) or seasonal cycles (agricultural runoff).

D. Variances of water quality variables. Known variances computed from collected water quality data may be useful in computing future sampling frequencies. Variances within a site compared with variances between sites will be useful in optimizing sampling frequency to avoid collecting data that are repetitive and do not provide much water quality information.

E. Data interpretation. Data collection frequency ties directly to data interpretation. This does not mean that a great deal of data must be collected. It does mean that data must be collected at the correct time and location.

F. The expected budget, distance to and between sampling points, and available manpower will have an influence upon the frequency of sampling.

As a rule, it is much better to restrict the area of study or scope of the program if non-hydrological constraints such as budget or manpower force a reduction in the frequency of sampling. Also, if statistical evaluations of the data are planned, then a statistical strategy in the sample collection must be in place. An appropriate number of samples must be collected to ensure that the number of degrees of freedom is sufficient so that something might be said about the data collected. Significant as sampling

frequency is in detecting stream standard violations, maintaining effluent standards, estimating temporal changes in water quality, and defining natural water quality variations, very few quantitative criteria for designating appropriate sampling frequencies are available. However, a few guidelines can be used to determine the frequency of sample collection.

These guidelines are:

1. Samples will be collected or measurements made at such intervals that no important cycles of change in concentration could pass unnoticed between sampling times. For some streams where flow is completely controlled by large storage reservoirs, or is maintained at a nearly steady rate by large, constant groundwater inflows, a single sample may represent the composition accurately for days or weeks. For many streams, however, one sample cannot be safely assumed to represent the water composition for more than a few days.

2. Statistical analysis of water quality data requires that observations be independent, that is, there will be little or no seasonal or serial correlation in a data set of a water quality variable. Seasonal correlation can be removed statistically. Generally, sampling surface waters more often than monthly may introduce serial correlation into a data set; groundwater sampling more frequently than quarterly may also introduce serial correlation into a data set. However, sampling stream waters more frequently may be desirable than once a month, for example, during spring runoff, depending on a study's objectives.

10.3 SAMPLE COLLECTION QUALITY ASSURANCE

Quality assurance is a significant part of every sampling program. It is a broad management concept of maintaining the ability to furnish reliable information, and requires complete integration of field and laboratory systems for sample collection and measurement. Quality assurance incorporates all peripheral but essential operations such as survey design, equipment preparation, maintenance tasks, data handling, and personnel training. The objectives of quality assurance are to assure that the generated data are meaningful, representative, complete, precise, accurate, comparable, and scientifically defensible.

Quality assurance begins in the planning of a water quality monitoring project. Quality assurance aspects in this phase of a project are generally incorporated in a statement of Data Quality Objectives (DQOs), Section 6.0. DQOs specify the kinds of data needed to fulfill the objectives of a water quality monitoring project. They ensure that the data collected will provide adequate information for making a decision. They require careful consideration during the planning and design of a sampling program (sampling site selection, sampling frequency, duration of sampling, water quality variable selection, etc.).

The collection of water quality data is just as important as the planning and design aspects. Quality assurance procedures must be followed to ensure that the integrity of samples collected is not compromised, that is, those samples accurately represent the source at the time they were collected. This requires that some basic sample collection, handling, and analytical procedures be followed.

The quality assurance procedures are:

A. If several locations are to be sampled during one sampling run which include both clean and polluted sites, use separate collection equipment (buckets, automatic samplers, bailers, etc.) at each location if possible. Otherwise, sampling will progress from the clean areas to the polluted areas and the collection equipment will be rinsed several times with the water from the new source before the sample is collected.

B. Sampling equipment (buckets, funnels, bailers, etc.) will be rinsed several times with the water to be sampled. PCBs, oil and grease, phenols, and hazardous waste samples will be taken directly into the sample container. If collection equipment is needed for PCBs or hazardous waste, one-time-use equipment will be used, if possible. Otherwise, decontamination procedures will be followed where appropriate.

C. The sample container must be appropriate to the sampled variable (**Table 10.1**). Use special cleaning procedures, if necessary (i.e., acid soaked bottles for trace metals analyses). Sample containers will be rinsed three times with the source water to be collected.

D. All instruments used in the field must be calibrated before

use, and periodically afterwards, according to the manufacturers' recommendations.

E. Continuous sampling devices must be calibrated according to the manufacturers' specifications at the time of setup and checked as often as necessary. Sampler components (lines, collection bottles, etc.) must be cleaned, or replaced as necessary, before use.

F. Equipment will be checked before being taken into the field to make sure they are operating satisfactorily. To the extent possible and practical, backup equipment will be available.

G. Each instrument requiring calibration will have a logbook assigned to it in which all calibration information can be recorded. Information must include date and time of calibration, method of the calibration, person performing the calibration, and comments. All maintenance and repairs done will are logged with the name of the individual doing the work. All maintenance and repairs will be done as soon as possible after the need for such work is noted. The recording of the calibration data, maintenance, and repair work is necessary to counter challenges to the quality, integrity, and acceptability of the field data.

H. All samples must be preserved according to EPA requirements (**Table 10.1**). Use preservative ampules sized for the volume of the sample collected (do not over or under preserve). Samples that must be cooled at 4 °C are best preserved with chunks of ice. Samples will be collected so that as little time as possible lapses before they are preserved. Data from samples that have not been properly preserved or have exceeded maximum holding times will be reviewed, later flagged or discarded.

10.4 QUALITY CONTROL

Quality Control (QC) involves specific tasks undertaken to determine the reliability of the laboratory data. It is accomplished internally by routinely analyzing blanks, duplicates, and spikes in the day-to-day operation of a laboratory, or externally by incorporating field originated blanks, duplicates, and spikes into the set of the samples collected during a water quality survey.

The objectives of QC samples are to ensure that 1) the integrity of data generated in a monitoring effort is not compromised by extraneous sources of contamination (blanks); 2) the reported data are favorably comparable to the true values (accuracy); and 3) the results of a sample collection and measurement process (data generated by analytical procedures) are reproducible (precision).

Water quality monitoring programs commonly use QC samples at two points in the data generating process:

A. Laboratories routinely use duplicates and spikes to establish limits for precision and accuracy for each measurement parameter. These limits may change depending on the analytical method and concentration range under consideration. The limits allow the investigator or data user to calculate an interval within which a reported concentration is expected to occur (95% confidence internal). Also, the systemic errors inherent in the operation of a laboratory or analysis of a sample (variation in the preparation of standards, miscellaneous contamination, inaccurate balances, instrument drift, interferences, etc.) will be quantified.

B. The second point in the monitoring process where QC samples are commonly used is in documenting quality control associated with the collection of samples in the field. Field blanks, duplicates, and spikes are routinely incorporated into a monitoring program without a good understanding of their function. The purpose of these samples is to validate the precision and accuracy of laboratory data, and to determine the adequacy of preservation techniques, equipment cleaning and preparation, and sampling procedures. Field blanks (Sections 11.11.1 and 11.11.2) are used to measure and quantify the amount of contamination from extraneous sources (preservatives, sample bottles, sample handling, automatic samplers, etc.) which might compromise the integrity of a sample (alter its true value or concentration).

Duplicates and spikes reflect not only the errors and variations inherent in the laboratory analyses, but also the errors and variations inherent in the collection of duplicate samples and preparation of spiked samples. If the analyses of duplicate and spiked samples are unacceptable ("out of limits"), it is virtually impossible to tell whether the cause originates within the laboratory, the field collection, or the preparation of the samples. Duplicate and spiked sample analyses that are acceptable ("within limits") have the total error from the field collection and laboratory analyses that is not greater than the laboratory error alone.

QC samples (spikes, duplicates, blanks) will be an integral part of any water quality monitoring. The frequency of collection depends on the nature of the monitoring effort; the guidelines presented here will be applied on a case-by-case basis. QA project plans will provide more specific information on their use in specific project areas.

1. Duplicate samples are independent samples that are equally representative of the parameters of interest at a given point in space and time. Results of duplicate samples will, theoretically, be the same. Realistically, results may differ due to the non-homogeneity of the sample source, sampling and analytical errors. Duplicate samples document the technique and ability of the sampler and analyst to produce representative water quality data. In long-term, ongoing monitoring programs, duplicates will be submitted quarterly for those water quality variables of interest. Short-term monitoring programs with distinctly different objectives will include at least one set of duplicate samples for those variables of interest.

2. Spiked samples are prepared by mixing or diluting a given volume of a known standard or reference solution (spike) with a volume of ambient water (matrix). The analytical objective is to "recover" 100% of the spike concentration. The actual amount recovered is expressed as a percentage.

$$100 \times \frac{A - B}{D}$$

Where: A = concentration of the matrix and spike
B = concentration of the matrix
D = actual concentration of the spike

The percent recovered will be within some predetermined acceptance limits established by the laboratory for that parameter and measurement method. Spiked samples will help project managers in validating data and point to problem areas in laboratory analysis.

3. Field blanks are obtained by running distilled/deionized water through sample collection equipment (pumps, filters, etc.) after decontamination and collection in the appropriate sample containers. The analyses of these samples will determine if the decontamination procedures have been sufficient. They will be collected, stored, and shipped with the other samples. At least one field blank will be collected during each sampling episode. In addition, at least one field blank will be collected for each thirty samples collected during any one episode.

4. Trip blanks generally pertain to volatile organic samples only. They are prepared before the sampling event in appropriate sample containers and are kept with the other samples collected throughout the sampling event. They are then packaged for shipment with the other samples and sent for analysis. At no time after preparation, the samples are to be opened before reaching the laboratory. One trip blank will be included for each sampling episode.

5. Preservative blanks are prepared by preserving a sample of distilled/ deionized water in an appropriate sample container. The sample is analyzed for the variables of interest. The samples determine whether preservatives, preservative ampules, or sample containers are contributing detectable concentrations of an analyte to an environmental sample. One preservative blank will be submitted for each sampling episode. In addition, at least one preservative blank will be submitted for each thirty samples collected during a sampling episode.

In some situations, combining several QC samples into a "hybrid" blank may be desirable. For example, an acid soaked bottle for trace metals analysis may be filled with distilled or deionized water in the laboratory and preserved in the field. The sample would not only meet the objectives of a field blank (thoroughness of decontamination) and a preservative blank (preservative contamination) but it would also indicate if contamination is introduced by the sample handling and preservation technique. To summarize, employing QC/QA methods to ensure the integrity and accuracy of the water quality data is important.

10.5 PRESERVATION

Since few samples will be analyzed at a sampling site, they must be stored in a container with a preservative to maintain the integrity of a sample. Complete preservation of samples (wastewater or natural waters) is a practical impossibility because complete stability for every constituent can never be achieved. At best, preservation can only retard the chemical and biological changes that take place in a sample after it is collected.

Methods of preservation are generally limited to chemical addition, pH control, and refrigeration (icing). Preservation is intended to retard biological action, retard the hydrolysis of chemical compounds and complexes, and reduce volatility of constituents.

Also, these requirements are generally applicable to the Safe Drinking Water Act. Preservation of samples for other acts (CERCLA, RCRA, FIFRA, TSCA) is often refrigeration only, or no preservation at all.

Some guidelines will be followed when preserving samples. These include:

A. Grab samples must be preserved as soon as possible; the collection of grab samples must be timed so that little delay occurs in preserving the sample.

B. Be careful not to contaminate other samples with preservatives intended for a different type of sample analysis. Of particular concern is the contamination of samples intended for nitrogen analysis with nitric acid used for preserving samples for metals analysis.

C. For composite samples, each aliquot will be preserved at the time of collection. When use of an automatic sampler is impossible then samples may be preserved by refrigeration (or icing) until the samples are composited.

D. Holding times for various parameters will be regarded as maximum holding times; analysis will always be conducted as soon after collection as possible.

E. Samples for analysis of dissolved metals will be immediately filtered on-site before adding nitric acid.

F. Samples requiring icing (refrigeration) must be iced as soon as possible. Cubed ice will be used liberally and in contact with as much of the sample container as possible. Cubed ice chills samples better than block ice or synthetic ices (blue ice).

G. The collection and preservation of fish samples require special handling techniques. These are covered in Field Collection Method Section 12.1.4.

H. Macroinvertebrate samples are preserved with 99% ethanol. As much water will be removed (decanted) as possible from the sample container before adding ethanol. An ounce or two (jigger) of formalin may be added to ensure sample preservation under adverse conditions (hot weather).

I. Periphyton samples for taxonomic identification are preserved by adding several ml of Lugol's solution, followed by refrigeration.

10.6 SAMPLE IDENTIFICATION

The method of identification of a sample depends on the type of measurement or analysis. When field measurements are made, the data are recorded directly in logbooks or on field data sheets. Identifying information includes project name, station numbers, station locations, date, time and names of samplers. Field measurements, observations, and remarks are then recorded.

Preserved samples for laboratory analyses are identified by a sample tag or other appropriate identification.

Sample tags will contain, at a minimum, the following information : sample location, sample number, date, preservatives, and analyses to be performed (TSS/VSS, commons, metals, nutrients). More detailed information on requested analyses is entered on the data card (Section 21.1).

Sample tags will be filled out using waterproof or indelible ink. Identifying information may be recorded directly on the sample container if it is known that such documentation is resistant to water, ice, rubbing or smearing, and other sorts of physical or chemical abrasion.

QC samples (duplicates, blanks, spikes) will be clearly marked. If a sample is to be split, it is aliquoted into similar sample containers. Identical sample tags are completed and attached to each split and marked " Split ". The tag identifies the split sample for the appropriate government agency, facility, or laboratory.

When samples are received by a chemical laboratory, a unique identification number is affixed to all sample containers appropriate to that particular sampling event, and to the LIMS database and analysis sheet containing the pertinent identifying information (sample station, location, date and time of collection, etc.). In this manner, all submitted samples are permanently identified by a unique sample number for recording of field and laboratory measurements, and for permanent storage of data. Samples can also be archived up to the maximum recommended holding time and reanalyzed, if necessary, with little chance of misidentification.

10.7 FIELD FORMS

The DEQ has field forms specifically for the collection of surface waters and groundwater samples, evaluating macroinvertebrate habitat, stream inventory, stream discharge, Chain-of-Custody, wetland assessment, and wetland jurisdiction (Section 21.1).

Samplers must use the appropriate form and are required to fill-in all the information requested that is relevant. The information on these forms includes sample location, hydrologic and environmental condition, date and time the sampling took place. These forms also assist in the tracking process to provide quality assurance.

The forms are used to notify the chemical laboratory that analytes are requested to be tested or are used to assist in the interpretation of results. Much of the information on these forms is also required for entering into the DEQ-AREV database and STORET.

11.0 Methods for Collecting, Analyzing, and Reporting Water Quality and Sediment Chemical Data

11.1 FIELD EQUIPMENT AND PREPARATION PROCEDURES

11.1.1 Field Equipment List

Compiling a list of required field equipment for every individual water quality survey is not practical. Field conditions, monitoring objectives, and the scope and intensity of surveys varies so widely that advanced planning and preparation are often necessary to define the equipment that will be needed to collect samples for water quality surveys.

Equipment may be characterized as "general sampling" or "specialized sampling" equipment. "General sampling" equipment might be considered as equipment that would be needed no matter what the circumstances of the planned survey. Special equipment may or may not be required. Once the objectives of a survey have been defined and knowledge of field conditions has been obtained, the appropriate equipment can be identified and prepared.

General sampling equipment includes:

- Vehicle (car, pickup truck, or 4-wheel drive depending on field and weather conditions)
- Sample bottles (250ml or 1-l polyethylene bottles with caps)
- Preservative ampules (nitric acid for metals, sulfuric acid for nutrients, sized for 250ml or 1L bottles)
- Waste vessel (jar or ziplock) for used ampules
- Hip boots
- Rubber gloves
- Coolers (with ice or ice packs)
- Notebook for field notes
- Pens, pencils and waterproof marking pens
- Camera and film
- Maps
- Field tote or 5-gallon bucket
- Flashlight and spare batteries
- Multi meter (pH, DO, Conductivity, Temperature)
- Hand-held GPS unit

Special equipment is categorized by objective:

Flow measurements:

- Marsh- McBirney Portable Current Meter
- Wading rod for current meter
- Tape measure
- Flow data sheet s
- Calibrated 5-gallon plastic bucket
- Stop watch
- Clipboard
- Wooden Stakes or re-bar and hammer
  - Key for gaging stations
- Carpenter's chalk
- Yardstick or calibrated rod for measuring weir depth
- Water measurement manual (tables for weirs, flumes, etc.)

Filtering:

- Filter holders with filter and prefilter
- Sample bottles
- Syringes
- Collection bottles (500ml, polyethylene)

pH Measurement:

- pH meter
- pH standards 4.0, 7.0, and 9.0
- Squeeze bottle with deionized water
- Plastic beake rs

Dissolved Oxygen (DO) Measurement:

- DO meter (YSI model 52A with probe)
- Winkler field kit (check reagents)
- 300ml BOD bottles
- Thermometers
- Mercury barometers

TSS sample collection:

- DH-48 or other depth-integrating sampling devices
- Pint g lass bottles (cleaned and rinsed with distilled water)
- Funnel
- Tape measure

Biological sampling:

- Sterile thiosulfate-treated bottles for coliforms
- Hess sampler, scrub brush and metal rod (benthic macroinvertebrates)
- D-net (benthic macroinvertebrates)
- 500ml or 1 Liter wide-mouth plastic jars for benthic samples
- Forceps
- Ethanol
- Formalin
- Brushes
- Squeeze bottle
- Periphyton jars
- Scraper (spoon, knife, spatula)
- Lugol's solution

Miscellaneous:

- Bucket and rope (for bridge sampling)
- Axe
- Clipboard
- Traffic cones for bridge work
- Data cards
- Chain-of-custody forms and seals for coolers
- Garbage bags
- Money
- Sunscreen
- Bug repellant
- Red pepper spay
- Government employee identification

11.1.2 Sample Container Preparation (Heavy Metals)

Procedures for equipment preparation, field collection, and field analyses shall be consulted before sampling begins to identify equipment needs most appropriate to a survey's objectives and expected field conditions.

A. EQUIPMENT:

1. 250ml polyethylene bottles

2. Preservative ampules

B. REAGENTS: 5% HNO_3

C. PREPARATION:

1. Fill bottles with 5% HNO_3 and cap.

2. Let bottles soak at least 48 hours.

3. Discard acid rinse, and rinse bottles at least three times with DI water.

4. Acid ampules shall be acid washed if contamination is known or suspected. Teflon ampules need to be soaked when new. When reused, only refilling is necessary.

D. PRECAUTIONS: None

E. SPECIAL INSTRUCTIONS:

1. Discard acid rinsate. Do not reuse.

2. Make sure acid-soaked bottles are clearly identified when taken into the field.

3. Procedure is particularly important for carbon-furnace trace metals analysis. Consult with a laboratory on the requirements for Mass Spectrometer/ AA analyses.

F. REFERENCES: None

G. PROJECT: Clark Fork Basin Study, NPDES Compliance Monitoring, Intensive Surveys, Drinking Water

11.1.3 Filtration

A. EQUIPMENT:

1. 500ml wide-mouth polyethylene collection bottles (Nalgene or equivalent)

2. Nuclepure or Swin-Lok filter holders

3. 47mm diameter, 0.45um Gelman Supor-450 membrane filters

4. 47mm diameter, Whatman GF/C glass microfibre prefilters

5. 60ml plastic syringes (Charise)

6. 150ml polyethylene sample bottles

7. 100ml polyethylene sample bottles

B. REAGENTS: 3:1 solution HCL

C. PREPARATION:

1. All equipment except filters and sample bottles must be soaked in HCL bath (add HCL to water!) then thoroughly rinsed in DI water.

2. Apparatus that comes into incidental contact with water samples (500ml collection bottles, filter holders, and syringes) requires at least 3-4 hours of acid soaking. All filter holders and syringes shall be disassembled completely before soaking.

3. Sample bottles that shall contain samples for days or weeks must be acid soaked overnight.

4. Rinse all bottles and caps at least three times with DI water.

5. Use a pipette washer to rinse syringes and filter holder components. Load apparatus into the pipette washer. Let washer fill and empty four or five times (approximately 20 minutes).

6. Assemble filter holders according to manufacturers ' instructions (use plastic gloves).

D. PRECAUTIONS:

1. Make sure all bottles and other apparatus are filled during the soaking period. Make sure all of the other apparatus comes into complete contact with the acid solution.

2. Use latex gloves or other hand covering during all aspects of cleaning and during filter assembly to prevent acid burns and contamination of apparatus from skin oils, dirt, etc.

3. Keep the acid bath covered during and after use.

E. SPECIAL INSTRUCTIONS : Change the HCL bath as needed.

F. REFERENCES: None

G. PROJECT: Clark Fork Basin Study, NPDES Compliance Monitoring, Intensive Surveys

11.2 WATERFLOW MEASUREMENTS

11.2.1 Introduction

The measurement of flow for surface water and wastewater sampling is essential to most water pollution control activities. Activi ties such as water quality enforcement studies, DEQ permit compliance monitor ing, water quality monitoring, municipal operation and maintenance investigations, planning, and research relies on accurate flow measurement data. The importance of obtaining accurate flow data cannot be overemphasized, particu larly with respect t o enforcement investigations since these data will be used as evidence in enforcement case preparation. DEQ permits often limits the quantity (mass loading) of a particular pollutant that may be discharged, and the calculations of mass loadings are also frequently necessary for water qual ity studies and other purposes. As much attention and care will be given to flow measurement in the design of a sampling program as to the collection of samples and their subsequent laboratory analysis.

The basic objectives of this section are to:

- outline standard practices for DEQ personnel with respect to waste water flow measurements during water enforcement and compliance monitoring activities, and other studies where wastewater flow measure ments are required;

- outline standard practices for obtaining surface water flow during water quality surveys;

- review acceptable, commonly used flow measurement techniques; and

- present general and specific quality assurance procedures for the flow measurement equipment and techniques.

A complete discussion of all available flow measurement techniques is beyond the scope of this manual. However, most of the common techniques currently in use are covered in general terms. A compre hensive list of references is included at the end of this section and a de tailed discussion of flow measurement techniques may be found in these references.

11.3 WASTEWATER FLOW MEASUREMENTS

11.3.1 General

The USDI Water Measurement Manual is the standard DEQ reference for details on checking the installation of primary open channel flow devices. Basic guidance for making wastewater flow measurements and a basic description of all common wastewater flow measurement systems are given in the EPA Compliance Inspection Manual. This manual shall also be used as DEQ guidance for such measurements.

11.3.2 Site Selection

It is the field investigator's responsibility to insure that the waste water flow measurement system or technique used measures the total wastewater discharged (described by the DEQ permit, if applicable). All recycled waters must be accounted for so that any reported flows accurately reflect the volume of wastewaters discharged. The actual location of wastewater flow measurement is not important if these criteria are met, and the chosen location is suitable for the technique or flow measurement system used to measure flow.

11.3.3 Flow Measurement Systems

Flow may be measured on an instantaneous or a continuous basis. A typical continuous system consists of a primary flow device, a flow sensor, transmitting equipment, a recorder, and possibly a totalizer. Instantaneous flow measurements can be obtained without using such a system.

The heart of a typical continuous flow measurement system is the primary flow device. This device is constructed to produce predictable hydraulic re sponses related to the flow rate of water or wastewater through it. Examples include weirs and flumes that relate water depth (head) to flow , Venturi and orifice type meters that relate differential pressure to flow, and magnetic flow meters that relate induced electric voltage to flow. Standard primary flow devices have undergone detailed testing and experimenta tion, and their accuracy has been verified.

A flow sensor is required to measure the particular hydraulic responses of the primary flow measurement device and transmit them to the recording system. Typically, sensors include floats, pressure transducers, capacitance probes, differential pressure cells, and electromagnetic cells.

The sensor signal is generally converted using mechanical, electromechani cal, or electronic systems into units of flow recorded directly on a chart or transmitted into a data system. Systems that use a recorder are generally equipped with a flow totalizer that displays the total flow on a real time basis.

Studies that require continuous flow measurements require a complete system. Instantaneous flow measurements do not necessarily dictate the use of any portion of such a system. Techniques that are described later in this section are available for measuring instantaneous flows with portable equipment.

An important consideration during wastewater studies is that the investi gator may want to obtain continuous flow data at a facility where only instan taneous flow data are being measured. If an open channel primary flow device is used for making the instantaneous measurements, only the installation of a portable field sensor and recorder is

necessary. If, on the other hand, the facility being investigated does not use a primary flow device, and a continuous flow record is desired , a portable primary flow device must be installed. This chapter does not cover in detail the installation of primary flow devices, but many of the cited references treat this area quite adequately.

Wastewater flow measurement systems are generally very accurate. The total error inherent in a flow measuring system is the sum of each component of the system. However, any system that cannot measure the wastewater flow within ± 10 percent of the actual flow is considered unacceptable for use in measuring wastewater flow.

11.3.4 Use of Existing Flow Measurement Systems

The installation of systems to measure wastewater flows can be a time-consuming task, particularly if a primary device is not available. Therefore, DEQ Program field personnel shall always use existing facility primary flow devices and flow measurement systems when the accuracy of these devices and the system can be verified. The objective of this section is to outline the responsibilities of DEQ field personnel in verifying the accuracy of existing primary flow devices and systems.

The field investigator must verify that any existing flow measurement system (including the primary flow device) used to measure wastewater flows conforms with recognized design and installation standards, and any deviation from standard conditions shall be thoroughly documented. The accuracy of the primary flow device shall be checked by making an independent "calibration" or flow measurement. If no usable or existing primary flow measuring device is available or if the device has been lost, the investigator shall attempt to install a portable primary flow device.

If the discharger's flow measurement system is accurate within $\pm$ 10 percent of the actual flow, the investigator can use the installed system. The accuracy of flow sensors and recorders can be easily checked for open channel flow devices by making an instantaneous measurement using the primary flow device and comparing this against the recorder reading. The accuracy of the recorder time trace shall be checked by physically marking the times on the flow chart and comparing these with the correct time. It is necessary to make an independent flow measurement when closed conduit systems must be checked.

If the existing equipment cannot be calibrated in a timely manner, the investigator shall install a portable flow sensor and recorder for the duration of the investigation. The installation and use of this equipment are preferred to attempts to correct incorrect flow measurement systems. The investigator shall note the action taken and inform the discharger that the equipment shall be calibrated as soon as possible if flow is required for calculating mass loadings or is itself a permit monitoring requirement. If nonstandard primary flow devices are being used, data supporting the accuracy and precision of the methods being employed shall be provided by the discharger.

11.3.5 Specific Techniques

This section outlines and familiarizes the field investigator with the most commonly used methods for wastewater flow measurements and the primary devices that shall be encountered during field studies. Volumetric and dilution techniques are presented at the beginning of this section, since they are appli cable to both open channel and closed conduit flow situations. The remaining methods are grouped under categories dealing with open channels and closed conduits. The general method of checking individual primary flow devices is given, where applicable. Several estimation techniques are presented. However, it shall be recognized that flow estimates do not satisfy DEQ permit monitor ing requirements unless the permit specifically states that this is permissible. The following methods are included to enable the field investigator to make accurate flow estimates when necessary.

Volumetric Techniques -- Volumetric flow measurement techniques are among the simplest and most accurate methods for measuring flow. Basically, these techniques involve the measurement of volume and/or the measurement of time required to fill a container of known size.

Vessel Volumes -- The measurement of vessel volumes to obtain flow data is particularly applicable to batch wastewater discharges. Accur ate measurements of the vessel volumes and the frequency that they are dumped are all required. An accurate tape to verify vessel dimensions and a stop watch are the only required field equipment. The NPDES Compliance Inspection Manual (2) is a useful reference on the equations for calculating volumes of various containers.

Sump Pumps -- This measurement is made by observing the sump levels at which the pumps cut on and off and calculating the volume contained between these levels. This volume with the number of pump cycles, shall give a good estimate of the daily wastewater flow. The inspector must also account for the quantity of wastewater that flows into the sump during the pumping cycle.

Bucket and Stop Watch -- The bucket and stop watch technique is particularly useful for the measurement of small wastewater flows. Using it is accurate and easy. The only equipment required to make this measurement is a calibrated container (bucket, drum, tank, etc.) and a stop watch. A minimum of 10 seconds to fill the container is recommended. Three consecutive measurements shall be made, and the results shall be averaged.

11.3.6 Dilution Methods

Dilution methods for water and wastewater flow measurements are based on the color, conductivity, fluorescence, or other quantifiable property of an injected tracer. Dilution methods require specialized equipment, special attention to detail by the investigator, and time consuming. However, these techniques offer the investigator:

- a method for making instantaneous flow measurements where other methods are inappropriate or impossible to use;
- a reference procedure of high accuracy to check in-situ those primary flow devices and flow measurement systems that are nonstandard or are improperly installed; and
- a procedure to verify the accuracy of closed conduit flow measuring systems.

The Turner Designs nomograph (3), the NPDES Compliance Inspection Manual (2), and the Geological Survey publication (4) outline the recommended reference procedures. The dilution method utilizing Rhodamine WT dye is the preferred reference procedure to be used by DEQ personnel when verifying the accuracy of flow measurement systems.

11.3.7 Open Channel Flow Measurements

Measurement of wastewater flow in open channels is the most frequently encountered situation in field investigations. An open channel is defined as any open conduit, such as a channel or flume, or any closed conduit, such as a pipe, which is not flowing full. The most commonly encountered methods and primary flow devices used in measuring open channel wastewater flows are described in this section. Several flow estimation techniques are also presented.

The measurement accuracies quoted in this section apply only to the specific method or to the primary flow device being discussed. Total error involved in a continuous flow measurement system, which is the sum of the errors of each component, is beyond the scope of this discussion.

Weirs -- A weir is defined as an overflow structure built according to specific design standards across an open channel to measure the flow of water. The theory of flow measurements using weirs involve the release of potential static energy to kinetic energy. Equations can be derived for weirs of specific geometry that relate static head to water flow (discharge). Weirs are generally classified into two general categories, broad crested and sharp crested.

Broad crested weirs take the following form ; $Q=CLH^{3/2}$. Values for the coefficient C are given in hydraulic handbooks (5, 6). Unless such weirs have been independently calibrated, they are usually not accurate enough for wastewater flow measurements.

Sharp crested weirs are constructed in a variety of shapes. Rectangular, V-notch, and Cipolletti weirs are the most common types. If such weirs are constructed as outlined in the USDI Water Measurement Manual (1), they are considered standard primary flow devices.

All weirs shall be inspected to determine if the weir installation and construction conform to the conditions given in the USDI Water Measurement Manual (1), provide a uniform influent flow distribution, and the weir is placed squarely across the channel perpendicular to the direction of flow. Useful tools for checking weir construction and installation include a carpenter's level, a framing square, a measuring tape, and a staff gage. Any problems observed during the inspection or study shall be noted in the field logbook.

A set of weir tables is necessary for calculating flows. The USDI Water Measurement Manual (1), the Stevens Water Resource Data Book (7), and the ISCO Open Channel Flow Measurement Handbook (8) contain a complete set of tables.

For more procedural information, refer to Paragraph I of this section , Field Analytical Procedure - Wastewater Discharge Flow - Weirs.

Flumes -- The conditions that must be met in a flume are similar to those that occur at a weir or spillway crest; water passing through the throat shall not be impeded by downstream conditions (constrictions, bends in a channel, obstructions). Types of flumes include the Palmer- Bowlus, Cutthroat, H, and Trapezoidal, but the most widely used is the Parshall flume. The Parshall flume is considered a standard pri mary flow device when constructed and installed as outlined in the USDI Water Measurement Manual (1). A complete discussion of other types of flumes is given in references 9, 10, 11, and 12.

All flumes shall be inspected to determine if the entrance conditions provide a uniform influent flow distribution, the flume dimensions conform to those given in the USDI Water Measurement Manual (1), the flume converging throat section is level, and the throat section walls are vertical. Useful tools for checking the construction and installation of Parshall (and other) flumes in clude a carpenter's level, a framing square, and a measuring tape. The flume shall be closely examined to determine if it is discharging freely. If any question about free discharge exists, the downstream head (Hb) shall be measured and compared with the head at the proper location (Ha) in the converging section. A staff gage is useful for making head measurements. Any problems observed during the inspection or study shall be noted in the field log book.

A set of flume tables is necessary for calculating flows. The USDI Water Measurement Manual (1), the Stevens Water Resources Data Book (7), and the ISCO Open Channel Flow Measurement Handbook (8) contain a complete set of tables. The explanatory material accompanying these tables shall be read and understood before they are used. In many cases, tabulated flow values are given for measured heads that are not within the usable measurement range.

Open Flow Nozzles -- Open flow nozzles such as parabolic or Kennison nozzles are factory calibrated and are ordinarily supplied as part of a flow measurement system. Calibration and installation information for each nozzle shall be supplied by or obtained from the manufacturer. The accuracy of these devices is reported to be often better than $\pm$ 5% of the indicated flow (10). A framing square is useful for checking the installation. Volumetric flow measurement may be used to check accuracy of this device if flow volumes are not excessive.

Velocity-Area Method -- The basic principal of this method is that the flow in a channel (cubic feet/second) is equal to the average velocity (feet/second) times the cross sectional area (square feet) of the channel. The velocity of the water or wastewater is determined with a current meter; the area of the channel is either measured or calculated using an approximation technique in conjunction with a series of velocity measure ments. The USGS mid-section method and the stream gaging techniques described in the USGS publication, Discharge Measurements at Gaging Stations (9) shall be the standard practice of the DEQ. This technique shall be used (where appropriate) as an independent flow measurement to verify the accuracy of existing flow measurement systems.

Slope-Area Method -- The slope-area method consists of using the slope of the water surface, in a uniform reach of channel, and the average cross sectional area of that reach, to estimate the flow rate of an open channel. Flow rate is estimated from the Manning formula (5, 6). This method is an estimation technique.

11.3.8 Closed Conduit Flow Measurements

The accuracy of closed conduit flow measuring devices shall be checked when necessary, by making an independent flow measurement, preferably using a dilution technique.

Venturi Meter -- The Venturi meter employs a conversion of static head to velocity head whereby a differential is created that is proportional to flow. The typical accuracy of a Venturi meter is given at 1% to 2% (10, 11, 12, and 13).

Orifice Meter -- The Orifice meter is a pressure differential device that measures flow by the difference in static head. Orifice meters require a 40 to 60 pipe diameters of straight pipe upstream of the installa tion. They can be quite accurate, i.e., within 0.5%, although their usable range is limited (10).

Flow Nozzle -- The basic principle of operation is the same as that of the Venturi meter. The flow nozzle has an entrance section and a throat, but lacks the diverging section of the Venturi. Flow nozzle accuracies can approach those of Venturi meters (10).

Electromagnetic Flow Meter -- The electromagnetic flow meter operates according to Faraday's Law of Induction where the conductor is the liquid stream, and the field is produced by a set of electromagnetic coils. The accuracy of the device is within $\pm$ 1% of full scale (10).

Other Closed Conduct Devices -- References for other closed conduit flow measurement methods such as acoustic flow meters, trajectory methods, pump curves, and water meters can be found in the NPDES Compliance Inspection Manual (2).

11.3.9 Wastewater Discharge Flow - WEIRS

A. EQUIPMENT:

1. Measuring devices (yardstick, calibrated rod or staff, or staff and measuring tape)

2. Blue chalk

3. Discharge table

B. PROCEDURE:

1. A weir is an overflow structure built across an open channel to measure the rate of flow of water or wastewater. It consists of a rectangular or V-notch opening having sharp edges and set vertically so that the flow passes over it and falls away freely. The discharge is a function of the water in the pool upstream from the crest relative to the crest elevation, and the size and shape of the weir (see illustration below).

2. Some weir structures shall have a permanently mounted staff gauge from which the head can be read. Discharge is determined from a table specific to the kind of weir installed (V-notch, Cipolletti, rectangular) or from a discharge equation.

3. If no staff gauge is permanently installed, the head must be measured manually. Depending on the size of the discharge channel, dropbox, or manhole, the measuring device could be a yardstick or a staff or rod several yards long.

4. To measure the head, chalk the portion of the measuring device in the area where the water line shall terminate. Sound the depth of the pool behind the weir, taking the measurement at a point sufficiently upstream to avoid the curve of the water surface over the weir (a distance four times the maximum head on the crest of the weir). Using the wet line on the chalked area to determine the pool depth, the head is calculated by subtracting the crest height from the height of the water surface.

5. Determine discharge from a standard discharge table appropriate for the kind of weir and angle of the V-notch.

C. SPECIAL INSTRUCTIONS:

1. Be sure that tables used to calculate discharge are appropriate for the kind of weir installed.

D. REFERENCES:

USGS (United States Geological Survey). 1980 National Handbook of Recommended Methods for Water Data Acquisition. Chapter 1 - Surface Water. 1980. Reston, Virginia

U.S. EPA (United States Environmental Protection Agency). Handbook for Sampling and Sample Preservation of Water and Wastewater. EPA-600/4-82-089. Environmental Monitoring and Support Laboratory. Cincinnati, Ohio.

E. PROJECTS:

NPDES Compliance Monitoring, Clark Fork Basin Study, Intensive Surveys

11.4 SURFACE WATER FLOW MEASUREMENTS

11.4.1 General

Surface waters are considered to be open channel for flow measurement purposes. All of the techniques used by DEQ personnel to measure open channel flows have been discussed in the wastewater flow measurement portion of this section. Except for very small surface streams, the installation of primary flow devices is not practical. Most surface water flow measurements are made using classical stream gaging techniques. These techniques involve the use of the velocity-area open channel technique discussed in the waste-water portion of this section. DEQ personnel shall use the techniques outlined in the USGS publication Discharge Measurements at Gaging Stations (9) to:

- Select the flow measuring site;
- Perform stream gaging; and
- Calculate flow.

11.4.2 Techniques

Where possible, DEQ stream studies shall be conducted utilizing the existing permanent stream gaging stations operated by the USGS, the U. S. Army COE, or other federal or state agencies. These permanent gaging stations have established water stage-discharge relationships that permit the flow to be obtained from water stage measurements. Staff gage or recorder readings of a water stage at these stations may be converted to flow by using the rating curve for that gaging station. The rating curve is available from the operator of the perm anent gaging station. An additional benefit of using these permanent gaging stations is that long-term flow records are generally available.

Where permanent gaging stations are not present, surface water flows shall be measured utilizing classical stream gaging techniques. If a station is to be used more than once during a water quality survey, a rating curve shall be developed for that station. This may be done by making a series of independent flow measurements and simultaneous tape down or staff gage measurements for that station at different water levels. The rating curve is developed using the same measurement section each time; at least two, and preferably three, flow measurement - tape downs shall be made. The flow measurements used to develop the rating curve must bracket the lowest and highest flows encountered during the study. A tape-down rating curve is constructed by plotting the tape-down measurements versus flows on a piece of semi-log graph paper.

11.4.3 Equipment Available (USGS National Handbook)

Equipment available to DEQ personnel for the measurement of surface water or wastewater flows is categorized as follows : water level/stage hardware and recorders, velocity measuring equipment and assemblies, and direct flow measurement equipment and instrumentation.

The hardware available to DEQ personnel to determine the rise and fall of a water surface with time (the water stage) includes the following recording devices : Stevens Model F horizontal drum recorders and Stevens Model A-71 continuous strip chart recorders, ISCO Model 1870 recording flow meters used in the linear head mode, and ISCO Model 2870 recording flow meters that have programmable functions. Non-recording equipment available includes vertical staff gages and tape-down systems.

Instruments and equipment available to make velocity cross sectional area measurements include current meters and sounding (depth) equipment. The current meters available to DEQ per sonnel are the vertical-axis mounted Price AA and Price pygmy meters (including direct readout meters), and Marsh- McBirney solid state current meters. Sounding (determination of depth) is accomplished using a standard top setting wading rod. Width measurements are made by DEQ personnel using a conventional surveyor's tape.

The equipment available for direct flow measurement includes the following primary devices available for installation by DEQ personnel : V-notch weir plates and rectangular weir plates. Corresponding conversion of water level to flow rate can be accomplished instantaneously from stage/staff gage readings corresponding to the primary flow device in use, or by instantaneous readings of the available recording flow meter systems. Continuous record ing systems available are the ISCO Model 1870 and 2870 recording flow meters.

11.4.4 Surface Water Flow Measurements (Streamflow)

11.4.4.1 Flowmeter

McBirney Model 201

NOTE: Other stream flow measuring devices include the Price AA meter and the pygmy meter. The pygmy meter is most useful for streams with low discharge.

A. EQUIPMENT

1. Marsh - McBirney Model 201 Portable Water Current Meter

2. Flow meter wading rod, calibrated in one-tenth foot intervals

3. Flow data sheets (Section 21.1.1.5) and clip board (with cord to put around the neck)

B. PROCEDURE

1. Set the selector switch to the "CAL" position. The meter shall show black (the calibrate sector of the scale) if the batteries are good and the instrument is working properly.

2. Attach the probe to the wading rod, making sure the clamp screw is tight and the probe is properly positioned (the clamp screw is vertical).

3. Select a stream section where flows are mostly parallel, where there are no sharp turns in water direction, and the bottom is reasonably smooth. The more uniform a channel is in depth, velocity, and substrate size, the more accurate the velocity measurements shall be. The section can be smoothed by reshaping the edges, removing rocks from the bottom, and removing branches, weeds, or grasses.

4. Set a tag line or cloth tape across the section as perpendicular to flow as possible. Anchor both ends securely to wooden stakes, trees, shrubs, or anchor with rocks or other large or heavy objects.

5. Begin measurements at either the left or right bank. The initial point is generally the tape reading of the waterline and often has no depth or velocity to measure. In this case, the first measurement is made at the first point where there is adequate depth (at least 0.2ft) and measurable velocity. Measurements (depth and velocity) can, at times, be made at one or both waterlines. In other situations, there may be no flow for some distance from the streambank due to stagnant water or backwater effects. In such a case, begin and end measurements in the verticals in the no velocity zone at the edge of where positive flow can be measured.

6. Water depth is determined from calibrations on the wading rod (three marks = 1 foot intervals, two marks = one-half foot intervals, one mark = one-tenth foot intervals); read depths ignoring the "pile-up" effect of water on the wading rod.

7. Velocity is measured at six-tenths depth from the water surface by moving the probe support so that the foot indicator marks align with the proper scale reading (in hundredths of a foot). Care must be taken to keep the meter pointed directly into the flow and to keep the rod in a vertical position. Wait at least 20 seconds before reading the panel meter. Because flow velocity usually fluctuates, the recorded velocity shall usually represent an "average" of the range of velocities noted during the measurement period.

8. Switch the selector switch to the proper velocity range (2.5, 5, or 10 feet per second) as conditions require.

9. Measurement points are best set at whole foot or half-foot intervals, depending on stream width.

C. PRECAUTIONS

1. The limit for wading is set by safety considerations. The amount of water that can be waded safely varies slightly with each individual, but is principally a function of velocity, depth, and substrate stability and slickness. Do not take chances in gauging " unwadable" streams.

2. The position taken when making wading measurements can affect the velocity of the water passing the current meter. The best position is usually about 1 to 3 inches downstream from the tape, and eighteen inches or more from the wading rod, holding the wading rod at the tag line, and standing in a position facing the bank.

D. QUALITY CONTROL

1. Because flow is not a direct measurement (velocity, depth, width, and area are measured first), the accuracy of the method cannot be determined. With selection of good cross sections, and careful measurements of depth and velocity, measured flow shall be within 15% of true flow.

2. Precision of the method (and technique of the investigator) can be determined by measuring total flow several times along the same cross section.

3. Peak instrument performance can be ensured by conducting the periodic maintenance tasks detailed in the Instruction Manual. These tasks include cleaning of the probe, checking the meter zero, and checking the condition of batteries.

E. SPECIAL INSTRUCTIONS

1. Because total flow determination in an open channel is a summation or integration process, the overall accuracy of the measurement is generally increased by increasing the number of partial cross sections. Generally, 25 or 30 cross sections, even for extremely large channels, are adequate depending on the variability and complexity of the cross sectional shape and flow patterns. With a smooth cross section and good velocity distribution, fewer sections may be used. Partial sections shall be spaced so no partial section contains more than 10 percent of the flow. The ideal measurement would have less than 5 percent of the flow in any one section. This means that measurement points are closer together in the deeper and faster parts of the stream and spread out in the shallower and slower parts of the stream. On small streams, a spacing of 0.5ft or less may be necessary, and there may be less than 20 measuring points.

2. Occasionally, flows are not perpendicular to the established cross section for its entire width. If high or low flows change flow patterns at an established cross section, consideration shall be given to temporarily or permanently moving a cross section rather than using a substandard, established one.

3. The following example demonstrates the calculations made using the mid-section method of measurement. The mid-section method assumes that the velocity at each sampling point represents the mean velocity in the partial rectangular cross sectional area. The partial area extends laterally from half the distance from the preceding meter location to half the distance to the next, and vertically from the water surface to the stream bottom.

F. PROJECTS

11.4.4.2 Stick Method

A. Procedure

1. Find a reach of stream that is fairly straight, as well as uniform in width and depth. This will assure that laminar flow is achieved to the greatest extent possible.

2. Measure the length of the reach (in feet) and mark each end.

3. Determine mean width (from the waters edge) by taking at least three transects within each reach.

4. Determine mean depth by measuring depth at multiple points throughout the reach.

5. Release a small stick or other floating object at the top of the reach and count the seconds to reach the lower point. Assure that the object stays in the main current. Repeat at least twice.

B. Calculation

1. Mean width x mean depth = cross-sectional area (ft^2)
2. Convert stick float time to ft/second
   (i.e., 26 ft/15 sec = 1.7 ft/sec)
3. Determine CFS (1 x 2).

Note: This method tends to underestimate flow somewhat due to the slower velocity of water near the surface. However, it is a good general estimate of flow.

11.4.5 References for Water Flow Measurements (From National Handbook of Recommended Methods for Water-Data Aquisition)

1. Water Measurement Manual, Second Edition, Revised, United States Department of Interior, Bureau of Reclamation, 1974.

2. DEQ Compliance Inspection Manual, United States Environmental Protection Agency, May 1988.

3. Fluorometric Facts, Flow Measurements, Nomograph, Turner Designs Company, Mountainview, California, 1976.

4. "Measurement of Discharge by Dye Dilution Methods," Hydraulic Measurement and Computation, Book 1, Chapter 14, United States Department of the Interior, Geological Survey, 1965.

5. King, H. W., and E. F. Brater, Handbook of Hydraulics, Sixth Edition, McGraw-Hill, New York, 1976.

6. Davis, C. V., and K. E. Sorenson, Handbook of Applied Hydraulics, Third Edition, McGraw-Hill, New York, 1969.

7. Stevens Water Resource Data Book, Third Edition, Leopold Stevens, Inc., Beaverton, Oregon, 1978.

8. ISCO Open Channel Flow Measurement Handbook, Second Edition, Second Print ing, Instrumentation Specialists Company, Lincoln, Nebraska, 1985.

9. "Discharge Measurements at Gaging Stations," Hydraulic Measurement and Computation, Book I, Chapter 11, United States Department of Interior, Geological Survey, 1965.

10. "Sewer Flow Measurement : A State-of-the-Art Assessment," Municipal En viron mental Research Laboratory, Office of Research and Development, United States Environmental Protection Agency, Cincinnati, Ohio, 600-275027.

11. A Guide to Methods and Standards for the Measurement of Water Flow, United States Department of Commerce, National Bureau of Standards, NBS Special Publication 421, 1975.

12. Wells, E. A. and H. B. Gotaas, "Design of Venturi Flumes in Circular Conduits," American Society of Civil Engineers, 82, Proc. Paper 928, April 1956.

13. American Society of Testing Mater ials, 1985 Annual Book of ASTM Standards, Volume 11 - Water, American Society of Testing Materials, Philadelphia, Pennsylvania, 1985.

14. “Groundwater, ” Section 18, USDA-SCS National Engineering

Handbook ,United States Department of Agriculture, Soil Conservation Service, 1978.

11.6 FIELD WATER CHEMISTRY

11.6.1 Water Temperature

A. EQUIPMENT

A thermometer of known immersion type marked in fractions of a degree calibrated against National Bureau of Standards (NBS) certified thermometer is desirable.

B. REAGENTS None

C. COLLECTION None

D. FILTRATION None

E. PROCEDURE

1. Immerse the thermometer to the correct depth. Total immersion thermometers are designed to be immersed to the top of the mercury column. In practice, keep the thermometer totally immersed until the temperature stabilizes, and partially immersed when reading the temperature.

76mm (3-inch) immersion thermometers are to be immersed exactly to that depth. Thermometers of this type usually have a line etched at that point.

2. Allow the thermometer to remain in the water until the temperature stabilizes.

3. Read the thermometer as accurately as possible. Estimate one decimal place more than the thermometer markings. Correct the reading and record on the data card.

F. PRESERVATION None

G. PRECAUTIONS

1. Since the water temperature in most streams is not constant from bank to bank, care must be exercised when measuring water temperature. Avoid shallow, slow moving sunlit areas. Select a location in the main flow of the stream, keeping the thermometer in the shade.

2. Lakes show vertical temperature gradients, so the temperature is measured at the same level the sample is taken. This depth is included in the site descrip tion on the sample card.

3. When using glass column alcohol thermometers, special care must be taken to prevent breakage. Mercury thermometers are not recommended because, when broken, sample and environmental contamination is a possibility.

H. QUALITY CONTROL

Thermometers must be standardized at a minimum of two temperatures (0 ^{o}C and 25 ^{o}C are preferable) by comparing readings with an ASTM or NBS standardized thermometer. Correction factors shall be recorded permanently on the thermometer. Restandardization may be desirable periodically.

I. SPECIAL INSTRUCTIONS

A second thermometer shall be carried into the field as a backup in case of breakage.

J. REFERENCES None

K. PROJECT

Clark Fork Basin Study, NPDES Compliance Monitoring, Intensive Surveys

11.6.2 pH

A. EQUIPMENT

1. Portable Mach One pH Meter, Model 43800-00

2. 50ml plastic beakers

B. REAGENTS

1. Buffers, pH 4.0, 7.0, and 9.0

2. DI water

C. COLLECTION

A sample can be placed in a 50ml plastic beaker for measurement away from the stream.

D. FILTRATION None

E. PROCEDURE

1. Turn the meter on (Press "0").

2. Press "pH".

3. Press "AUTO" manual. The "Auto" indicator shall light. The "S1" and "pH" indicators shall flash. Zeros shall appear on the display.

4. Place the electrode in the pH 4.0 buffer and press the Dispenser Button once. For best calibration, allow thirty seconds before pressing the key in step 5.

5. Press "STANDARD" and wait until the pH indicator stops flashing. The "S2" indicator now shall begin flashing. The actual pH value shall appear in the display. If the solution temperature deviates from 25°C, the display shall show the actual pH and not 4.01.

6. Rinse the electrode with deionized water. Place the electrode in the pH 7.0 buffer and press the Dispenser Button. Allow 30 seconds to elapse before performing step 7.

7. Press "STANDARD". "S2" shall stop flashing. Wait until the pH indicator stops flashing. The actual pH value shall appear in the display. If the solution temperature deviates from 25 °C, the display shall show the actual pH and not 7.00.

8. Pressing any other key than "pH" at this point

shall cause the meter to revert to its previous calibration, and the new calibration shall be lost.

9. Press "pH". Rinse the electrode with deionized water, place into the sample, and press the Dispenser Button.

10. Swirl the sample gently. The meter is now measuring the pH. Read the sample pH value in the display after the stability indicator stops flashing. Stability is usually reached in 20-30 seconds.

F. PRESERVATION None; analyze immediatel y

G. PRECAUTIONS

Read the instrument manual before use to become more familiar with key functions, one and two standard calibration procedures, maintenance, troubleshooting, error codes, etc.

H. QUALITY CONTROL

Check the meter periodically using a pH 7.0 or 9.0 buffer. If drift has occurred, recalibrate.

I. SPECIAL INSTRUCTIONS

1. Calibration may be better if done with buffers that bracket the range of pHs being measured. If measuring lake and stream pHs, pH 7.0 and 9.0 buffers are more likely to bracket the expected pH values than pH 4.0 and 7.0 buffers.

2. If the screen displays a fluctuating reading or gives an E1 error code, air bubbles in the electrode solution tubing are causing trouble. Dispense more electrode solution with the Dispensing Button or by turning the Priming Knob counterclockwise to remove the air bubbles.

3. The probe indicator shall remain on if the calibration offset deviates from 0.0mV by 60 to 120mV and/or the slope deviates from the ideal slope of 59.2mV/pH unit by 15 to 30% (the expected slope may deviate from 59.2mV/pH unit by 5%; greater values indicate that the meter is unable to detect stable conditions). Use the "REVIEW" key to note the offset and slope. Correct a wrong offset by a one-buffer calibration. Correct a wrong slope and offset by a two-buffer calibration or return to the factory-set calibration by removing the battery from the meter for five seconds or longer.

J. REFERENCES

Manual for Portable Hach One pH Meter Model 43800-00

K. PROJECT

Clark Fork Basin Study, Intensive Surveys, Drinking Water

11.6.3 Dissolved Oxygen (Winkler Method)

A. EQUIPMENT

Field Kit including:

1. Two BOD bottles with glass stoppers
2. One filler tube and rubber stopper
3. One burette and 500ml reagent bottles
4. One 250ml erlenmeyer flask
5. One 200ml plastic volumetric flask
6. Nail clippers, knife, or razor blade
7. Small flashlight or penlight
8. One plastic 100ml beaker

B. REAGENTS

Manganous Sulfate Powder Pillows (Hach Catalog No. 1071)

Alkaline - Iodine - Azide Reagent Powder Pillows (Hach Catalog No. 1072)

Sulfamic Acid Powder Pillows (Hach Catalog No. 1073)

Phenylarsine Oxide (PAO) Standard Solution 0.025N (Hach Catalog No. 1070)

Starch Solution

C. COLLECTION

1. Rinse the BOD bottle three times with the sample water. Insert a filler tube-rubber stopper into the BOD bottle, and place bottle in water as shown below:

2. With a vented rubber stopper in place, hold the bottle vertically under water with a rubber vent tube above the water surface. Fill the bottle completely, making sure there are no trapped air bubbles.

D. FILTRATION None

E. PROCEDURE

1. Add one powder pillow of manganous sulfate and one powder pillow of alkaline-iodine- azide. Add the reagents slowly to avoid introducing air into the sample.

2. Stop with care to exclude air bubbles and mix by inverting the bottle at least 20 times.

3. Allow floc to settle below numbers on the bottle. Shake and allow to settle again.

4. Carefully add one powder pillow of sulfamic acid, re-stop, and mix by gentle inversion until floc dissolves. At this point, samples may be stored a few hours in the dark without changing the results.

5. Rinse the small volumetric flask several times with a small volume of an acidified sample. Insert the flask mouth into the BOD bottle and invert to fill the flask (for a 300ml sample bottle, 203ml volume is taken for titration).

6. Fill the burette with PAO solution using the squeeze bulb. Zero the initial reading by gently tapping the burette.

7. Rinse the erlenmeyer flask several times using the excess acidified sample from the BOD bottle. Pour the sample from volumetric flask into the erlenmeyer flask. Titrate with PAO, swirling the flask gently, to a pale straw color.

8. Add 12-15 drops of starch solution and continue titration to the first disappearance of the blue color. Refill the burette if more than 10ml of titrant is required.

9. Final burette reading equals mg/L of dissolved oxygen. Record to nearest 0.05mg/L.

F. PRESERVATION None; sample may be stored temporarily (refer to Procedure step 4).

G. PRECAUTIONS

1. Certain oxidizing agents cause positive interferences; certain reducing agents cause negative interferences ; certain organic compounds partially obscure the titration endpoint. Higher concentrations of ferrous or ferric iron also reduce accuracy.

2. Starch solution shall be as "fresh" as possible. Old starch solution may make the endpoint difficult to observe.

3. Keep fixed samples out of direct sunlight.

4. Using PAO of a different normality shall require a conversion of the final reading.

H. QUALITY CONTROL

A duplicate shall be analyzed near the beginning of a survey to assess analytical technique.

I. SPECIAL INSTRUCTIONS None

J. REFERENCES

Standard Methods, 15th Edition, pp 388-393.

K. PROJECTS

Clark Fork Basin Study, Intensive Surveys

11.6.4 Dissolved Oxygen(DO Meter Method)

A. EQUIPMENT

YSI Model 54A Oxygen Meter with probe and acces sories (membran es, KCl probe solution, o-ring, razor blade)

B. REAGENTS None

C. COLLECTION

Samples for the measurement of dissolved oxygen shall be collected very carefully so that atmospheric oxygen is not introduced into the sample. Avoid aeration, turbulence, or any other kind of agitation that could introduce air into a sample.

D. FILTRATION None

E. PROCEDURE

1. Calibration

a) Switch the instrument to "OFF" and adjust the meter to mechanical zero.
b) Switch to "RED LINE" and adjust to zero.
c) Plug the probe into the instrument, and wait 10 to 15 minutes for the probe to polarize. Keep the probe in a high humidity environment (i.e., a calibration chamber).
d) Switch to "ZERO" and adjust to "0" on the PPM scale.
e) Switch to "TEMP" and read on °C scale.
f) Use the probe temperature and true local atmospheric pressure (or elevation above sea level) to determine the calibration values from Tables I and II on the back of the meter.
g) The correct calibration value is calculated by multiplying the DO concentration at the probe temperature by the factor for the station elevation.
h) Switch to 0-10 or 0-20ppm DO range and adjust the meter with "CAL" control to the calibration value determined in step g.

2. Measurement

a) Place probe in sample and stir.
b) Allow sufficient time for probe to stabilize to the sample temperature and dissolved oxygen concentration.
c) Read the dissolved oxygen on the approp riate range.

F. PRESERVATIONS

None; measure dissolved oxygen immediately

G. PRECAUTIONS

1. Before using the probe, check the membrane for wrinkling or for bubbles in the solution underneath the membrane. If either condition exists, refill the probe with KCl solution and replace the membrane.

2. Avoid agitation of the sample (see step C).

H. QUALITY CONTROL

When possible, a Winkler titration shall be performed on a sample to check the meter's performance.

I. SPECIAL INSTRUCTIONS

1. Sluggish or erratic meter performance could indicate that the probe solution or membrane needs replacing.

2. The instrument shall be left on "ZERO" between measurements to avoid having to repolarize the probe.

J. REFERENCES

Instructions for YSI Model 54 Oxygen Meter

K. PROJECTS Intensive Surveys

11.6.5 Specific Conductance

A. SCOPE AND APPLICATION

This method is applicable to ground, surface, and saline waters, in addition to domestic and industrial wastes.

B. SUMMARY OF METHOD

- The specific conductance of a sample is measured by the use of a self-contained conductivity meter, Whetstone bridge-type, or equivalent.

- Samples are p referably analyzed at 25 °C. If not, temperature corrections must be made and the results reported at 25 °C.

C. TEST PROCEDURE

1. Follow instructions manual for the specific field conductivity meter used.

2. Check the meter with two standard solutions of approximate specific conductances of 100 and 1,000umhos/cm, or standards that bracket the expected sample conductance. If the meter does not read within one percent of the standards, determine what the problem is and correct it before proceeding. Most field instruments read conductivity directly; with those instruments, follow the manufacturer's instructions. Report the results to the nearest ten units for readings less than 1,000umhos/cm and the nearest 100 units for readings more than 1,000umhos/cm.

3. Record the actual sample temperature when the measurement is made. The meter reading shall be converted to specific conductance at 25 °C using the information in the manufacturer's instruction manual.

D. APPARATUS SECTION

- Beckman SoluBridge ® Model RB-5/RB-6
- YSI Model 3530 Flow Through Cell
- Hydrolab Corporation Surveyor II

E. PRECISION AND ACCURACY

These conductivity meters have an accuracy of ± 2% of reading. With satisfactory equipment, results within 1% of the true value shall be obtained.

F. REFERENCES

Standard Methods for the Examination of Water and Wastewater, 16th Edition, p. 76, Method 205 (1985).

Annual Book of ASTM Standards, Part 31, "Water," Standard D1125-64, P. 120.

Methods for Chemical Analysis of Water and Wastes, US-EPA, 120.1 (1983).

Instruction Manual, SoluBridge ® RB-5/RB-6, Beckman Instruments, Inc., Rev. January 1982.

Surveyor II Operating Manual, Hydrolab Corporation, Rev. A February 1985.

YSI Model 3560 Water Quality Monitoring System Instructions, July, 1988.

11.6.6 Free and Total Chlorine(Colorimetric Method)

A. EQUIPMENT

Hach Free and Total Chlorine Test Kit, Model CN-70

B. REAGENTS

1. DPD Total Chlorine Reagent Powder Pillows for 25ml Sample, Catalog No. 14064

2. DPD Free Chlorine Reagent Powder Pillows for 25ml Sample, Catalog No. 14070

C. COLLECTION

No special instructions are required for the collection of the samples.

D. FILTRATION None

E. PROCEDURE

1. Rinse the square mixing bottle thoroughly with the sample water. Fill the bottle to the 25ml mark.

2. Add the DPD free chlorine or DPD total chlorine powder pillow to the bottle. Swirl the bottle until most of the reagent has dissolved.

3. Fill one viewing tube to the 5ml mark with the prepared sample.

4. Hold the color comparator with the front facing you (Hach logo is visible). Insert the tube of the prepared sample into the top right opening of the comparator.

5. Fill the second viewing tube with an untreated water sample. Insert this tube into the top left opening.

6. Hold the comparator up to a light (sky, window, lamp) and view through the openings in the front. Rotate the disc to obtain a color match.

7. Read the mg/L free chlorine through the scale window within one minute of the addition of the powder.

F. PRESERVATION None

G. PRECAUTIONS

1. High concentrations of monochloramine shall interfere with the results of the free chlorine test. The free chlorine concentration must be read within one minute of adding the reagent.

2. This method is only acceptable for potable water. The spectrophotometric method needs to be used for wastewater or ambient samples due to the increase accuracy of this instrument. Regulation 40 CFR 136 (NPDES) does not allow the colorimetric method for regulatory purposes.

H. QUALITY CONTROL

Check the method against a laboratory spectrophotometer, or test laboratory-prepared chlorine standards.

I. SPECIAL INSTRUCTIONS

This procedure is applicable for free or total chlorine concentrations of 0 to 3.5mg/L. If a more accurate measurement of low concentrations (0.0-0.7mg/L) is desired, the following modifications to the procedure must be made:

1. Fill the viewing tubes (steps E3 and E5) to within 1/16 inch of the top. The tubes must be stoppered carefully to exclude air bubbles.

2. The lengthwise viewing adapter and tubes must be inserted as shown in the diagram below:

3. Divide the value read from the scale windows by 5 to obtain the mg/L free or total chlorine

J. REFERENCES

Instructions for Hach Free and Total Chlorine Test Kit, Model CN-70

K. PROJECTS Drinking Wat er

11.7 MULTIMETERS

11.7.1 Horiba Water Quality Checker U-10

The U-10 Water Quality Checker is an instrument for simultaneous multiparameter measurement of water quality. The Horiba U-10 measures six different parameters of water samples: pH, conductivity, turbidity, dissolved oxygen, temperature, and salinity.

The U-10 is relatively compact and easily transported. Measurements are taken simply by immersing the probe right into the water sample. The U-10 can store up to 20 data sets in memory.

The U-10 is easily calibrated using standard pH 4.0 buffer. Using the Auto-calibration procedure, the instrument automatically calibrates pH, conductivity, dissolved oxygen (atmosphere), and turbidity. If more accuracy is desired, a two-point calibration can be performed.

The U-10 auto-calibration accuracy appears to be good for conductivity (5%). The pH tends to drift on low conductivity samples (<300umhos/cm) and has a 0 .5 pH units accuracy. For higher conductivity waters, the pH has an accuracy of 0.1 pH units. Dissolved oxygen has an accuracy of about 2ppm and has a tendency to drift. The dissolved oxygen reading is sensitive to significant changes in the temperature and/or atmospheric pressure that may occur while transporting the meter in a vehicle. In addition, the dissolved oxygen must be corrected for altitude because the U-10 was originally calibrated at sea-level. The correction factors are found on the graph below. To reduce drifting, the dissolved oxygen meter must be allowed to equilibrate to its environment before taking a reading. The turbidity reading is the least accurate of the tests and shall only be used to compare one site from another.

REFERENCE Instruction Manual/Altitude Correction

11.7.2 Hydrolab Scout 2

The Hydrolab Scout has a multiprobe capable of measuring temperature, pH, dissolved oxygen, conductivity, salinity, depth, and redox potential. The multimeter has a 100 meter cable attaching the multiprobe to the Scout 2 Display unit. The Hydrolab Scout 2 is most useful when rapid collection of data from a lake or deep river environment is desired.

The Hydrolab Scout can also be programmed to record water quality readings unattended in a stationary environment at preset time intervals. However, this is not recommended by the DEQ due to potential theft, vandalism, or catastrophes. The replacement cost of the Hydrolab Scout and multiprobe exceeds $6000.

If calibrated correctly the Hydrolab field multimeter can have a precision and accuracy similar to that of laboratory pH, conductivity, and oxygen meters.

REFERENCE Instruction Manuals
PROJECT Clean Lakes

Section No. 11.0
Revision No. 0
Date: 9/28/98

Oxygen Correction Factor

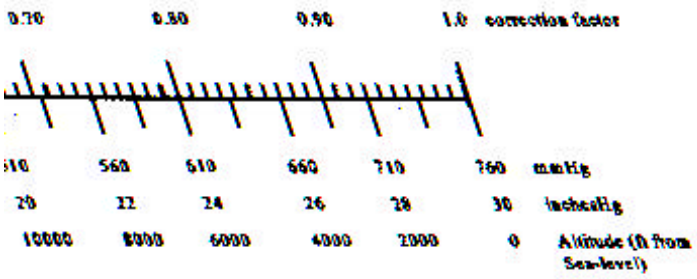

Dissolved

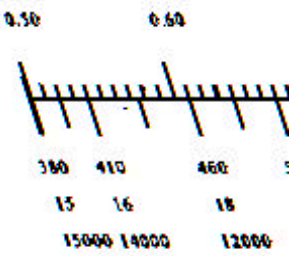

11.8 SEDIMENT COLLECTION

A variety of methods can be used to collect a sediment sample underlying a waterbody. Dredging (Peterson, Ekman, Ponar), coring, and scooping (BMH-60) are competent methods. Regardless of the method, precautions must be taken to insure that the sample collected is representative and sediment samples collected for chemical analysis are thoroughly mixed (except purgeable organic compounds analysis) before being placed in the appropriate sample containers.

These methods are discussed in the following paragraphs.

11.8.1 Lake Sediment (Ekman and Ponar Grab Samplers)

For routine analyses, the Peterson dredge can be used when the bottom is rocky, in very deep water, or when the stream velocity is high. The dredge must be lowered very slowly as it approaches bottom, because it can displace and miss lighter materials if allowed to drop freely.

The Ekman dredge has only limited usefulness. It performs well where bottom material is unusually soft, as when it is covered with organic sludge or light mud. It is unsuitable, however, for sandy, rocky, and hard bottoms and is too light for use in streams with high velocities. It can not be used from a bridge more than a few feet above the water, because the spring mechanism that activates the sampler can be damaged by the messenger if dropped from too great a height.

The Ponar dredge is a modification of the Peterson dredge and is similar in size and weight. It has been modified by the addition of side plates and a screen on the top of the sample compartment. The screen over the sample compartment permits water to pass through the sampler as it descends thus reducing the "shock wave." The Ponar dredge is easily operated by one person in the same fashion as the Peterson dredge. The Ponar dredge is one of the most effective samplers for general use on all types of substrates.

11.8.2 Wetland or Littoral Zone Sediment (Core Sampler)

Core samplers are used to sample vertical columns of sediment. They are particularly useful when a historical approach to sediment deposition is desired for they preserve the sequential layering of the deposit. Many types of coring devices have been developed depending on the depth of water from which the sample is to be obtained, the nature of the bottom material, and the length of core to be collected. They vary from hand-push tubes to weight or gravity driven devices.

Coring devices are particularly useful in pollutant monitoring because the "shock wave" created by descent is minimal, thus the fines of the sediment-water interface are only minimally disturbed.

The sample is withdrawn intact permitting the removal of only those layers of interest. Core liners manufactured of glass or Teflon can be purchased, thus reducing possible sample contamination. The samples are easily delivered to the lab for analysis in the tube in which they were collected.

The disadvantage of coring devices is that a relatively small surface area and sample size is obtained often requiring repetitive sampling to obtain the required amount for analysis. Since it is felt that this disadvantage is offset by the advantages, coring devices are recommended in sampling sediments for trace organic compounds or metals analyses.

In shallow, wadeable waters, the direct use of a core liner or tube manufactured of Teflon or glass is recommended for the collection of sediment samples. Their use can also be extended to deep waters when SCUBA equipment is available. Teflon is preferred to avoid glass breakage and possible sample loss. Stainless steel push tubes are also acceptable and provide a better cutting edge and higher strength than Teflon. The use of the glass or Teflon tube by itself eliminates any possible metal contamination from core barrels, cutting heads, and retainers. The tube should be about 30.5cm (12in) if only recently deposited sediments 20.3cm (8in) or less are to be sampled. Longer tubes shall be used when the depth of the substrate exceeds 20.3cm.

Soft or semiconsolidated sediments such as mud and clays have a greater adherence to the inside of the tube and thus should be sampled with larger diameter tubes. Because coarse or unconsolidated sediments such as sands and gravel tend to fall out of the tube, a small diameter tube is more appropriate. A tube about 5.1cm (2in) in diameter is usually the best size. The wall thickness of the tube should be about 0.83cm (0.33in) for either Teflon or glass. The inside wall may be filed down at the bottom of the tube to facilitate entry of the liner into the substrate.

Caution must be exercised to not disturb the area to be sampled when the sample is obtained by wading in shallow water. The core tube is pushed into the substrate until only 10.2cm (4.0in) or less of the tube is above the sediment-water interface. When sampling hard or coarse substrates, a gentle rotation of the tube while it is pushed will facilitate greater penetration and cut down on core compaction. The tube is then capped with a Teflon plug or a sheet of Teflon held in place by a rubber stopper or cork. After capping, the tube is slowly extracted, the negative pressure and adherence of the sediment keep the sample in the tube. Before pulling the bottom part of the core above the water surface, it too is capped.

11.8.3 Grab Samples (Scooping)

If the water is wadeable, the easiest way to collect a sediment sample is to scoop the sediment using a stainless steel spoon or scoop. This reduces the potential for cross-contamination. For streams, this can be accomplished by wading into the stream, and while facing upstream (into the current), scooping the sample along the stream bottom in the upstream direction. If the stream is too deep to wade but less than 2.4m (8ft) deep, a stainless steel scoop attached to a piece of conduit can be used either from the banks if the stream is narrow or from a boat.

11.8.4 Total Suspended Sediment (TSS)

A. EQUIPMENT (Depth-integrated sampling)

1. US DH-48 Suspended Sediment Hand Sampler with 0.64cm (0.25in) nozzle

2. One glass pint TSS sample bottle with 0.64cm (0.25in) clean nozzle

3. One liter polyethylene sample bottle

4. One plastic funnel

B. COLLECTION

1. Determine the appropriate sampling interval width, based on the length and depth of the cross section and flow velocity. Visually inspect the cross section from bank to bank, observing the velocity and depth distribution, and apparent distribution of sediment in cross section. Determine the size of the interval that represents approximately 10% of the flow at that part of the cross section where the "unit width discharge" is the largest or has greatest concentration of sediment is moving. This interval size must then be used for the entire cross section. The number of sections is generally not less than 10 nor more than 20.

2. Begin sampling where there is sufficient depth and velocity. In shallow water, there is the chance of disturbing the sampling bedload, which is not material in true suspension. In very sluggish water, the sample bottle shall not readily fill.

3. Take samples at the predetermined interval. The sampler containing the sample bottle is lowered from the surface of the water to the streambed and immediately raised back to the surface, at a constant rate with the nozzle pointed directly into the flow.

4. Using the same bottle, sample intervals until the bottle is filled to within about 6.4 to 7.6cm (2.5 to 3in) from the top (about 400ml). Do not overfill, as secondary circulation and enrichment of heavy particles may occur.

5. Rinse the funnel in the stream, and use it when pouring the sample from the sample bottle into the l liter polyethylene bottle. After most of the sample has been transferred, swirl the remaining sample to resuspend any remaining sediment before transferring the remaining water.

6. Fill the 1 liter polyethylene bottle no more than

75% full, leaving sufficient room for agitation and complete mixing. The more suspended solids, less sample must be collected. Collect at least 500ml for laboratory analysis.

7. Determine a vertical transit rate that will yield about 800ml (approximately two bottlesful) of sample in one traverse of the cross section.

C. FILTRATION None

D. PRESERVATION Chill to < 4 ^{o}C

E. PRECAUTIONS

1. Do not disturb the streambed by bumping the sampler onto it, or dislodged material from the bed may enter the nozzle, giving incorrect results. Each bottle must be inspected. If coarse material is present, the bottle is emptied and rinsed, and the section is resampled using the same sampling intervals.

2. If a bottle is overfilled, the bottle is emptied, rinsed, and the section is resampled using the same sampling intervals.

F. QUALITY CONTROL

When duplicate TSS samples are collected, use the same sampling intervals and vertical transit rate.

G. GRAB SAMPLES - SPECIAL INSTRUCTIONS

There are occasions when grab sampling for TSS shall be desirable. Some of these are:

1. Stream velocity is too fast to safely wade the cross section.

2. Large floating and/or submerged debris is present.

3. Stream depth is very shallow.

4. Stream velocity is very slow.

5. Stream width and depth are too great to depth integrate.

When grab sampling a stream too shallow to depth integrate, immerse a hand-held bottle in the centroid of flow with the mouth of the bottle directed toward the current. Care must be taken to avoid getting the mouth of the bottle too close to the streambed. When grab sampling a stream too large or too deep to depth integrate, grab sample in a location where velocity is representative and at a depth approximately one half the distance from the water surface to the streambed.

H. REFERENCES

Field Guidelines for Collection, Treatment, and Analysis of Water Samples, Montana District US Geological Survey. Open File Report 85-409.

"A Study of Methods Used in Measurement and Analysis of Sediment Loads in Streams. Report J., Operating Instructions for US DH-48 Suspended Sediment Hand Sampler: Intra-Agency Committee on Water Resources, Subcommittee on Sedimentation, 1965.

I. PROJECT

Clark Fork Basin Study, Intensive Surveys

11.8.5 Sediment Collection for Trace Metal Analysis

Contamination of a waterbody with trace metals is not always detectable in the water column. Therefore, other measurements are needed to determine if a waterbody has been impacted by trace metals. These measurements may include collecting biological samples or sampling the sediments deposited from the water column.

Trace metals entering a waterbody may not be detectable in the water column because they may have precipitated, or adsorbed to organic particulates or fine sediments. Also, contamination from an intermittent source may have been moved past the sample site (i.e., flushed out).

A. GRAB SAMPLE ANALYSIS

Sediment samples collected using methods in Sections 10.1 may be analyzed for trace metals to identify potential sources of water column pollutants. The laborator processes the sample by oven drying at 40 °C and pulverizing with a pestle and mortar.

A subsample is then digested with nitric acid, diluted, analyzed for total recoverable metals and reported in ug/kg (ppm) as dry weight (oven dry).

If there is a desire for temporal or spatial comparability of total recoverable metal results it may be important to have information regarding particle size and total organic carbon (TOC) content of the sediment. This information assists in determining the variations in the sample physical features that may influence attenuation of trace metals by the sediment. A sediment sample containing large amounts of silts, clays, or TOC is more likely to adsorb trace metals.

B. Separating Sands from Fines by Sieving

One method developed to collect samples that are comparable is by sieving the sediment fines. Saturated sediment is collected and sieved in the field via gravity or a hand vacuum pump through a 0.062mm nonmetallic mesh inserted onto a large diameter plastic funnel. The 0.062mm mesh size separates fines from sands. Site water is used to wet sieve 100 grams of fines into a 1 liter container. The sample is kept chilled at 4 °C and delivered to the laboratory.

At the laboratory the excess water is decanted, and evaporated from the fines by oven drying at 40 °C. A subsample can then be analyzed for total recoverable trace metals and TOC.

C. SEDIMENT SAMPLING METHODS

Equipment:

--1 1000mL or 2000mL sample bottle
--Two-piece plastic Buchner funnel
--2 pieces of spectra nylon mesh filter paper (60 micrometer pores)
--Plastic spoon
--1 250mL periphyton bottle
--1 used 1000mL sample bottle
--1 large nitric acid ampule
--1 1000mL wash bottle filled with DI water

Method:

First identify at least 5 wadeable, depositional zones at the site being assessed. These zones must be made up of VERY fine bed sediment, since uniform size sediment is being filtered through a mesh with pores of 60 microns in diameter. Depositional zones will be found on the inside bends of the stream, shallow waters near the shore, or areas just downstream from obstacles such as boulders, islands, sand bars, etc. These zones must represent the entire stream reach as best as possible, so it is important to identify as many zones as is necessary to accomplish this. A composite sample of sediment will be taken from the zones that have been identified. At each zone, subsamples will be taken. The number of subsamples will be determined by the areal size of the zone (the larger the areal size, the greater the number of subsamples that should be collected). This is done in order to get a complete representation of each zone. Sediment should not be scooped from one spot in the zone, but from the entire zone.

Before taking any samples, the equipment must be cleaned. Take the nitric acid ampule and pour it in the 1000mL wash bottle filled with DI water. Wash off all of the equipment by spraying the dilute nitric acid over the used 1000mL sample bottle which will be used to collect the nitric acid. Place the tephlon 60 micron sieve between the two pieces of the buchner funnel.

At the first zone, scoop sediment from the stream bed and place it on the sieve in the funnel. Scoop sediment from various places in the zone to represent the zone (as discussed above with areal size). Fill the funnel about an inch and a half deep with the very fine sediment. Too little an amount of sediment will not give enough filtered particles and too much will do damage to the mesh. One inch to 1 ½ inch is sufficient. Make sure the sediment completely covers the mesh filter and add ambient stream water using the periphyton bottle as a scoop. Once the water is added, stir the water and sediment being very gentle not to damage the filter mesh. If the composite sample is to be made up of 6 different zones, for example, make sure that you fill the jar no more than 1/6 full. This will help get a more representative sample of the stream reach. The less water the better, but you must get at least 1cm of filtered

sediment in order for analysis. Once the first zone is completed pour the excess sediment out and move to the next zone.

At the second zone, rinse the equipment with stream water and then repeat the steps from the first zone. Do the same for the remaining zones until the jar is filled. As was stated above, you do not need to completely fill the 2L bottle. The least amount of water, the easier it will be for the lab to analyze the sample. There must be at least 1 cm of filtered sediment for analysis.

Once done, close the jar and rinse off the equipment. Place a removable label on the jar with the name of the site, date, recorders' names, the number of zones making up the composite sample, and any other pertinent information. The jar should be stored in a cooler and kept cool until delivered to the lab. DO NOT preserve the sample. Allow the filter mesh to dry separate from the funnel so it is not damaged. Only one sample is necessary for each site. Deliver the sample to the lab for ICP scan of metals present. Make sure bottles are acid soaked and returned after analysis.

D. REFERENCES

Methods of Soil Analysis. Part 1 - Physical and Mineralogical Properties, Including Statistics of Measurement and Sampling. 1965. Chapter 43 - Particle Fractionation and Particle-Size Analysis.

Methods of Soil Analysis. Part 2 - Chemical and Microbiological Properties. 1965. Chapter 90 - Organic Carbon.

National Handbook of Recommended Methods For Water-Data Acquisition. 1977. Office of Water Data Coordination, Geological Survey, U.S. Department of the Interior, Reston, Virginia. Chapter 3 - Sediment.

11.8.6 Percent Fines Calculation

Methods for Determining Percent Fine Sediments in Stream Beds

Sediments that are smaller than six millimeters in diameter are classified as fine, and the concentration of these sediments in a streambed is given as a percent of the total sediment. DEQ procedures for classifying percent fines are a modification of the procedure used by the U.S. Forest Service. The method used by the DEQ facilitates easier viewing of the substrate, as well as a simplified sampling procedure.

Site Selection

The samples are t aken in pool tails and riffles, depending on the relative abundance of each in the stream reach being assessed. For example, if the reach contains 70% riffles and 30% pools, then 70% of the sediment samples should come from riffles and 30% from pool tails. Samples within the pools and riffles are taken at random.

Sampling Parameters

The DEQ has determined that at least six samples need to be taken to achieve a stable level of variability. A series of test samplings was run ; the first involving only one sample, the last involving ten samples. The standard deviation for the percent fine sediments of each set was calculated, and the difference between the deviation of each

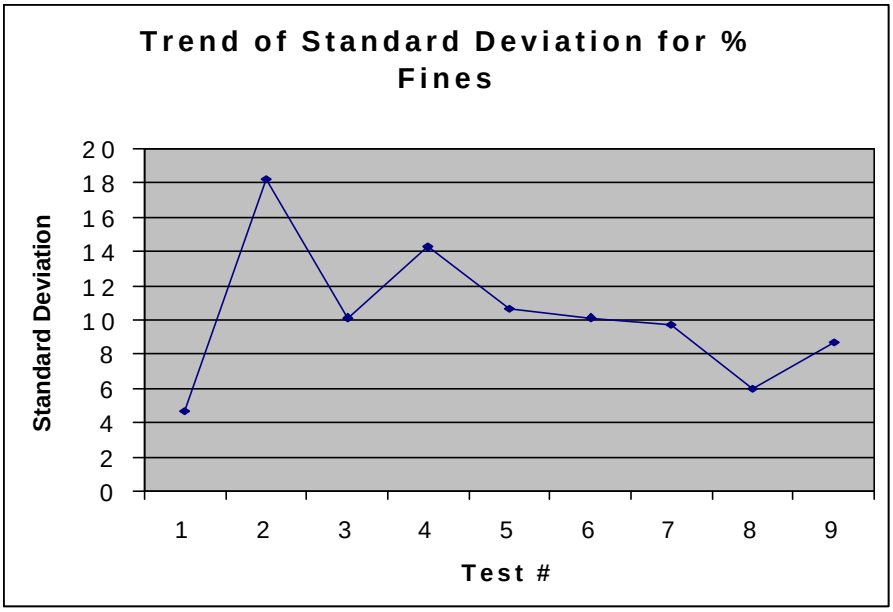

set began to level out at six samples. More than six samples do not significantly affect the accuracy of the assessment, but fewer than six and the accuracy is noticeably affected, as seen in the graph below.

Equipment

Equipment for this procedure consists of a five-gallon bucket with a clear grid in the bottom. The grid is made of lines intersecting every inch to form 49 intersections (the 4 corners are cut off to make 45). Each intersection is left empty to form a space 6 mm long on each line to aid in determining sediment size. The grid material itself is a clear acrylic (plexi-glass). A square just large enough to view 45 of the intersections is cut in the bottom of the bucket, and the grid is glued on. Four legs, approximately 1 inch long, are glued to the bottom to hold the bucket up off of the sediment. A brightly painted rock, about the size of a baseball, is also used.

Procedure

To take samples, toss the rock out into the stream as randomly as possible. Place the center of the grid over where the rock settled, and count the number of intersections where sediment smaller than 6mm is present. Repeat this procedure until 6 samples have been collected.

Calculations

The percent of the sediments in the stream that are fine is calculated by dividing the number of fine sediments in each sample by the total number of intersections. The average of the six samples is calculated, and this number represents the percent of the sediments in this section of stream that are classified as fine.

References

R1/R4 Fish and Fish Habitat Standard Inventory Procedures Handbook. USDA, Forrest Service. May, 1997
pp. 30

11.9 WATER COLLECTION

11.9.1 Grab Samples (Streams)

A. EQUIPMENT

1. Sample bottles (plastic or glass appropriate for the constituent being sampled and sized for the amount required for analysis)

2. Preservatives

B. COLLECTION

1. Select a spot where the sample shall represent the stream or river. In small, wadable streams, a sample collected mid-depth at midstream is usually assumed to represent the source. If flow patterns, depth, or another feature suggests that such a location would probably not produce a representative sample, select a better place to sample.

2. Sample bottles shall be identified with the following information (using a sample label or indelible pen) : station name and number, date, parameters (metals, nutrients, TSS/VSS, commons), and preservatives.

3. Stand in the stream facing upstream. Rinse out the bottles three times with the source water. Fill bottles, leaving enough room for the preservative. When collecting TSS, fill the bottle no more than 75% full which allows the laboratory analyst to thoroughly mix the sample before aliquoting.

4. Preserve samples following recommended EPA guidelines (refer to Section 10.5).

C. FILTRATION

Filtration is required only for the collection of dissolved constituents. Refer to the specific procedure of interest for sample filtration.

D. PRESERVATION

Samples must be preserved following recommended EPA guidelines (refer to EPA Handbook Section 3.1.4).

E. PRECAUTIONS

1. Be sure that the inside surfaces of sample bottles and bottle caps are not touched or come into contact with some object or material that could contaminate the sample.

2. Check sample bottles to make sure that bottles are correctly identified with the required information. Make sure samples are promptly and correctly preserved.

3. Tighten the bottle caps securely to avoid loss of contents.

F. QUALITY CONTROL

The most important aspects of quality control in the collection of water quality samples are:

1. Samples collected represent the source at the time the samples are collected, and that these samples shall produce the quality of information necessary to meet the objectives of the survey.

2. The integrity of the samples collected is not compromised by contamination, misidentification, or improper sample handling or preservation.

G. SPECIAL INSTRUCTIONS

Several water quality constituents require a slight modification in the collection procedure. For example, sample bottles for oil and grease, and volatile organic compounds shall not be rinsed with the source water before filling. This method is acceptable for most commonly analyzed constituents (BOD, COD, TSS, commons, metals, nutrients). Consult a reference or a laboratory analyst about sample containers, preservatives, collection procedures, etc., when samples are collected for less routine analysis.

H. REFERENCES

U.S. EPA (U.S. Environmental Protection Agency). 1982 Handbook for Sampling and Sample Preservation of Water and Wastewater, U.S. EPA-600/4-87-049, Environmental Monitoring and Support Laboratory, Office of Research and Development, Cincinnati.

11.9.2 Dissolved Nutrients or Metals

A. EQUIPMENT

1. One 500ml. wide-mouth polyethylene collection bottle (Nalgene or equivalent)

2. One Swin-Lok nuclepore filter holder (with 47mm diameter, 0.45um Gelman Supor-450 membrane filter and 47mm diameter Whatman GF/C glass fibre prefilter)

3. One 60ml syringe (Charise)

4. One 150ml polyethylene sample bottle

5. One 100ml polyethylene sample bottle

B. COLLECTION

Rinse the 500ml bottle three times with the ambient water sample. Fill the bottle to within several millimeters of the top, then cap. If the sample contains significant suspended solids that might making filtering difficult, allow the sample to settle no longer than 1 hour.

C. FILTRATION

1. Draw 50ml of sample into the syringe. Insert syringe into filter holder cap and purge the filter with water. Waste the filtrate.

2. Detach syringe and draw another 50ml of sample. Filter approximately 25ml into each sample bottle. Rinse bottles with filtrate and discard rinse water.

3. If collecting for Soluble Reactive Phosphorus (SRP), filter 50ml of water into the 100ml bottle. Label the bottle for SRP analysis (Do not preserve).

4. If collecting for dissolved nutrients, filter 100ml of water into the 150ml bottle. Immediately preserve with H_2SO_4. Label for analysis of N (dissolved NH_3 and dissolved NO_2 + $N0_3$) or P (dissolved ortho-phosphorus; Note: this is not the same as soluble reactive phosphorus).

D. PRESERVATION

For dissolved nutrients, dilute H_2SO_4 for N (provided by laboratory in marked ampules) to compensate for a smaller sample size than is used for total nutrients (100 ml verses 250 ml). Do not use any preservative for SRP. Chill to <4°C. SRP must be analyzed within 48 hours; sample to be analyzed for N must meet the recommended holding times.

For metals, use dilute HNO3 to compensate for a small sample size.

E. PRECAUTIONS

1. Special care must be taken to avoid sample contamination. Do not touch the surfaces of any filtration apparatus (syringes, filter holder inlet or outlet, caps of collection or sample bottles) which shall come into contact with the filtered or unfiltered sample. Do not let these surfaces come into contact with the surfaces of other objects to prevent contamination from or transfer of dirt, dust, oil, grease, etc.

2. Keep filtered samples well chilled (<4 °C). Special arrangements for sample shipment, analysis, etc., may have to be made to meet the 48-hour holding time for SRP.

3. Use 150ml bottles for nutrients and metals, and 100 ml bottles for SRP. This standardization shall help avoid confusion during sample preservation and laboratory analysis.

F. QUALITY CONTROL

See Field Collection Procedure, Section 10.4, for the preparation of filter blanks.

G. SPECIAL INSTRUCTIONS

Use only apparatus prepared using Equipment Preparation Procedure, Section 11.1.

H. REFERENCES None

I. PROJECT

Clark Fork Basin Study, NPDES Compliance Monitoring, Intensive

11.9.3 Integrated Samples (Equal Width and Depth)

An integrated sampling design may be desirable to reflect the average concentration for parameters sampled in stratified lakes and reservoirs. The DEQ uses point integration sampling of lakes using a Kemmerer bottle or similar device, and compositing.

Integration sampling may also be desirable for constituents that are not uniformly dissolved or suspended in the water column of streams and rivers. The constituents sampled may include total suspended sediment, total recoverable metal, total metals, or total nutrient concentrations that may be associated with sediment. Stream integration sampling is an attempt to meet the basic requirement that the sample collected represents the entire water-sediment mixture at the immediate vicinity of the sampling point at the time of sampling.

The DEQ uses a DH-48 depth integrating sampler and the equal-width-increment method (USGS, 1985) to sample wadeable streams. The methods incorporate equal width and depth by sampling by depth integration at vertical space across a transect. A total load (i.e., tons/day or lbs/day) of sediment, total nutrients or total metals can be estimated by measuring stream discharge simultaneously with the collection of an integrated sample. The total load is calculated by the following equation:

Depth Integrated Sample Concentration (mg/L)(0.0000000011026 tons/mg)(28.31684 L/CF)(Measured CFS)(86,400 sec/day) = tons/day

A. PRECAUTIONS

If sampling for trace metals do not use metal alloy integrated samplers where the sample has contact with the metal.

B. REFERENCES

National Handbook of Recommended Methods For Water – Data Acquisition, USGS (1977)

Field Guidelines for Collection, Treatment, and Analysis of Water Samples, Montana District. U.S. Geological Survey Open-File Report 85-409 (1985)

11.9.4 Pesticides

A. EQUIPMENT

Acetone-rinsed one-gallon glass container with teflon-lined caps (supplied by Chemistry Laboratory)

B. COLLECTION

Samples collected from surface water for pesticide analyses are collected as are most other water samples.

The container does not need to be rinsed with the source water. Fill the container and cap.

C. FILTRATION None

D. PRESERVATION

No preservative is added. Chill the sample to <4 °C. Holding time is 14 days.

E. PRECAUTIONS None

F. QUALITY CONTROL None

G. SPECIAL INSTRUCTIONS

Laboratory analyst needs some idea of the specific pesticide to be analyzed. No scan can be run to give preliminary identification of one or a group of pesticides that might be present. Consult with the Chemistry Laboratory before samples are collected.

H. REFERENCES None

I. PROJECT

Intensive Surveys (Complaint Investigations)

11.9.5 Water Sampling Equipment (Teflon Bailer, Kemmerer, and Van Dorn Bottles)

The physical location of the investigator when collecting a sample may dictate the equipment to be used. If surface water samples are required, direct dipping of the sample container into the stream is desirable. This is possible, however, only from a small boat, a pier, etc., or by wading in the stream. Wading, however, may cause bottom de posits to rise and bias the sample. Wading is acceptable if the stream has a noticeable current (is not impounded), and the samples are collected directly into the bottle while pointed upstream. If the stream is too deep to wade or if the sample must be collected from more than one water depth or from a bridge, etc., supplemental sampling equipment must be used.

Teflon bailers may be used for surface water sampling, if the data requirements do not require a sample from a strictly discrete interval of the water column. A closed top bailer with a bottom check-valve is sufficient for many studies. As the bailer is lowered through the water column, water is continually displaced through the bailer until the desired depth is reached, at which point the bailer is retrieved. This technique may not be successful where strong currents are found, or where a discrete sample at a specific depth is required.

If discrete samples are desired at a specific depth, and the parameters to be measured do not require a Teflon coated samplers, a standard Kemmerer or Van Dorn sampler may be used. The Kemmerer sampler is a brass cylinder with rubber stoppers that leave the ends of the sampler open while being lowered in a vertical position to allow free pass age of water through the cylinder. The Van Dorn sampler is plastic and is lowered in a horizontal position. In each case, a messenger is sent down a rope when the sampler is at the designated depth, to cause the stoppers to close the cylinder, which is then raised. Water is removed through a valve to fill respective sample bottles. With a rubber tube attached to the valve, DO sample bottles can be pro perly filled by allowing an overflow. With multiple depth samples, care shall be taken not to stir up the bottom sediment and thus bias the sample.

A plastic bucket can be used to collect samples if the parameters to be analyzed do not preclude it. However, the bucket shall be rinsed twice with the sample water before collection of the sample.

11.9.6 Automatic ISCO Samplers

The automatic ISCO sampler is a programmable sampler that can be used where intensive routine sampling is desired. The sampler can be set to sample at time intervals or flow intervals by hook up to an automated ISCO flow meter. The sampler can be programmed to collect composite or grab samples at preset volumes.

The ISCO sampler, however, can require a great deal of effort to install and needs to be protected from the elements and vandalism. In order to generate useful data the ISCO sampler also requires sound technical support.

A. REFERENCES Owners Manual

11.11 QUALITY CONTROL (WATER SAMPLING)

11.11.1 Filter Blanks

A. EQUIPMENT

1. One 500ml wide-mouth polyethylene collection bottle (Nalgene or equivalent)

2. One Swin-Lok filter holder (with 47mm diameter 0.45um Gelman Supor-450 membrane filter and 47mm diameter Whatman GF/C glass fibre prefilter)

3. One 60ml syringe (Charise)

4. Four 150ml polyethylene sample bottles

5. Two 100ml polyethylene sample bottles

B. COLLECTION

1. Rinse four sample bottles three times each with DI water.

2. Fill one 100ml bottle with approximately 50ml of DI water. Label "DI Blank #1". Analyze for O-PO_4.

3. Fill one 150ml bottle with approximately 100ml of DI water. Label "DI Blank #2". Preserve with H_2SO_4. Analyze for NH_3 and NO_2 + NO_3.

4. Fill one 150ml bottle with approximately 100ml of DI water. Label "DI Blank #3". Preserve with HNO_3. Analyze for trace metals.

C. FILTRATION

See Dissolved Nutrients or Metals, Section 11.9.2, for collection methodology, and for filtration procedure. Fill the second 100ml bottle with 50ml of filtrate. Label "Filter Blank #1." Analyze for O-PO_4. Fill second 150ml bottle with 100ml of filtrate. Label "Filter Blank #2". Preserve with H_2SO_4. Analyze for NH_3 and NO_2 + NO_3. Fill the third 150ml bottle with 100ml of filtrate preserve with HNO_3. Analyze for trace metals.

D. PRESERVATION

Dilute H_2SO_4 for N(provided by laboratory in marked ampules) to compensate for small sample size. No preservative for P.

E. PRECAUTIONS

See Field Collection Procedures, Section 10.4, for special precautions.

F. QUALITY CONTROL

Use only DI water taken from carboy used by Laboratory Analyst to prepare standards. This is the freshest DI water in the laboratory.

G. SPECIAL INSTRUCTIONS

1. Use only apparatus prepared using Equipment Preparation Procedure, Section 11.1.

2. Filter blanks may be prepared in either the laboratory or the field. The primary purpose of the blanks is to check the thoroughness of the procedure for acid-cleaning filtration apparatus and to check for contaminants in the filters.

H. REFERENCES None

I. PROJECT

Clark Fork Basin Study, NPDES Compliance Monitoring, Intensive Surveys

11.11.2 Field Blanks

A. EQUIPMENT

One 250ml polyethylene bottle filled with DI water

B. COLLECTION

Rinse bottle three times with DI water. Fill bottle nearly to top and cap.

C. FILTRATION None

D. PRESERVATION

Transport bottle to field. At the end of the field study, preserve sample with HNO_3 for trace metals and H2SO4 for total nutrients. Return to laboratory for analysis.

E. PRECAUTIONS

1. Make sure bottle has been acid-soaked according to Equipment Preparation Procedure, Section 11.1.

2. Determine whether the preservative ampule shall be a Teflon ampule or a regular laboratory preservative ampule.

F. QUALITY CONTROL

Use only DI water taken from carboy B in the Chemistry Laboratory. This carboy is used most frequently and water in it is therefore replaced often. It is also the water used in the preparation of laboratory standards.

G. SPECIAL INSTRUCTION

One liter bottle may be needed for analysis of certain metals or nutrients.

H. REFERENCES None

I. PROJECT

Clark Fork Basin Study, NPDES Compliance Monitoring, Intensive Surveys.

11.11.3 Duplicates

A. EQUIPMENT

1. Sample bottles (1L or 25ml polyethylene bottles)

2. Preservatives

B. COLLECTION

1. Samples are collected following Water Collection Procedures, Section 11.9.1, (Grab Samples) and procedures for the particular parameters of interest (i.e., TSS, Dissolved Nutrients, etc.).

2. When collecting duplicate samples, all steps performed in collecting one sample (or set of samples) shall be repeated so that two samples (or sets of samples) have been collected.

3. Ideally, duplicates shall be submitted to the laboratory under a fictitious name that is recorded in the field notes or log book. Due to the laboratory's familiarity with the DEQ's long term sampling programs, "fictitious" names often arouse suspicion and it is debatable whether such precautions accomplish their objectives. Fictitious names are usually more successful in one-time surveys or short term surveys where laboratory analysts are unfamiliar with sampling locations. Duplicates may be submitted to the laboratory labeled as "Duplicate" samples.

4. Duplicates must be handled identically (temperature, preservation, etc.).

C. FILTRATION

Filtration is conducted as required in the procedure appropriate to the parameter(s) of interest.

D. PRESERVATION

Samples are preserved as necessary to meet EPA requirements. It is important that duplicates be handled (temperature, preservation, etc.) identically.

E. PRECAUTIONS

1. It is important that duplicates are collected under the same conditions. In grab sampling streams, wastewater discharges, etc., this can best be done by collecting them side-by-side and simultaneously, if

possible. Samples collected at different times or at different points in a stream shall not be measuring the error in the collection or analytical process, but the natural spatial or temporal variation in water quality.

F. QUALITY CONTROL

1. Acceptable limits for duplicate sample analyses is defined as a difference no greater than two standard deviations specified in the laboratory's Quality Assurance limits for the appropriate parameter, concentration range, and measurement method.

2. In case duplicate analyses are unacceptable ("Out of limits"):

a) Audit the records (field notes or log book, laboratory records, bench logs, strip charts, internal quality control checks) and evaluate methodology and techniques.
b) Initiate corrective action based on the findings of step a.
c) Submit another duplicate as soon as possible for the constituents in question.
d) Re-evaluate procedures and/or records associated with the new duplicate as soon as possible.
e) Determine the acceptability of data; unacceptable data shall be withheld from the data base; withdrawn from the data base if already entered; or used with discretion.

3. If a duplicate is submitted using a fictitious name, be sure appropriate steps are taken to prevent its being entered permanently into the computer or office file as a real sample.

G. SPECIAL INSTRUCTIONS

There is often a temptation to take duplicate samples from a "common bucket" to eliminate temporal and/or spatial water quality variability. While this increases the homogeneity of the sample, it also represents a deviation from the usual sample collection procedure and introduces another possible source of sample contamination. Such a procedure shall be avoided.

H. REFERENCES None

I. PROJECT

Clark Fork Basin Study, NPDES Compliance Monitoring,

Intensive Surveys, Drinking Water

11.11.4 Spikes

A. EQUIPMENT

1. One new four-liter polyethylene cubitainer

2. One clean (preferably acid rinsed) 1000ml volumetric flask

3. One 10ml volumetric pipette

B. REAGENTS

1. Environmental sample

2. Preservatives

3. EPA Quality Control samples

C. PREPARATION

1. Spikes are prepared by diluting a small volume of an analyte of known concentration with an environmental sample (matrix). After analyzing the spike and the environmental sample, the accuracy of the measurement method can be determined by calculating how much of the analyte was recovered.

2. Spikes shall be prepared so that the addition of an analyte increases the sample concentration by 50 to 200 percent. This requires that the environmental sample collected have measurable concentrations of the constituents of interest, preferably at a minimum concentration of 5X the detection limit. Historical data shall be reviewed to determine possible sources of environmental samples. Slightly to moderately polluted waters (i.e., below wastewater treatment discharges, streams affected by acid mine drainage) are good prospects.

3. Select an EPA Quality Control sample to use for the spike. Select one that, based on the review of historical data, shall increase concentrations of the constituents of interest 50 to 200 percent.

4. Collect the environmental sample in the four-liter cubitainer. Rinse three times before filling, and preserve with an adequate amount of the appropriate preservative. Handle and ship as any other sample.

5. Consult instructions for EPA Quality Control samples for specific preparation instructions. Generally, 10ml of the QC sample are pipetted into the volumetric flask, then diluted to 1000ml with the environmental sample (procedure may vary depending on the constituent of interest). Mix thoroughly.

6. Transfer the spiked sample to a regular sample bottle. The spike is identified and is recorded in the field notes or log book.

7. Transfer the environmental sample to a regular sample bottle and label with the proper identifying information.

8. The sample and spike must be handled identically (temperature, preservation, etc.), and analyzed for the same parameters.

9. Submit both spike and sample to the laboratory in a routine manner.

D. PRECAUTIONS None

E. SPECIAL INSTRUCTIONS

1. Acceptable spiked sample analyses are recoveries within the acceptance limits specified in the Chemistry Laboratory's Quality Assurance Limits for the constituent, concentration range, and analytical method of interest. Percent recovery is calculated as

$$100 \times (A-B)/D$$

Where A = concentrations of matrix & spike
B = concentration of matrix
D = actual spike concentration

2. In case analyses are unacceptable ("out of limits"):

a) Audit the records (field notes or log book, laboratory records, bench logs, strip charts, internal quality control checks) and evaluate methodology and techniques.
b) Initiate corrective action based on the findings of step a).
c) Submit another duplicate as soon as possible for the constituents in question.
d) Re-evaluate pro cedures and/or records associated with the new duplicate as soon as possible.
e) Determine the acceptability of the data. Unacceptable data shall be withheld from the data base, withdrawn from the data base if already entered, or used with discretion.

3. If a spike is submitted using a fictitious name, be sure appropriate steps are taken to prevent its being entered permanently into the computer or office files as a real sample.

F. REFERENCES None

11.11.5 Reference Sample

A. EQUIPMENT

1. One clean (preferably acid rinsed) 1000ml volumetric flask

2. One 10ml volumetric pipette

B. REAGENTS

1. One reference sample

2. Preservatives

3. Deionized water

C. PREPARATION

Reference samples are prepared by diluting a small volume (10ml) of an analyte of known concentration to 1 liter with deionized water and adding the required preservative. The reference sample has a known confidence interval that must be achieved by a USEPA certified laboratory and shall be run with all samples for QA/QC.

D. PRECAUTIONS None

E. SPECIAL INSTRUCTIONS

Reference samples are run by the Chemistry Bureau routinely. Documentation of reference sample QA/QC is available from the Chemistry Bureau on demand.

F. REFERENCES None

Appendix C

Northen Analytical Laboratories (Chemistry) Standard Operating Procedures

Sample Receipt and Log - In

Analytical Method SOPs by SAP Section

3.2.1 TDS and SAR

3.2.2 TSS

3.2.4 Metals

3.2.5 Nutrients and chlorophyll-a

STANDARD OPERATING PROCEDURE
for
TOTAL DISSOLVED SOLIDS
or
FILTERABLE RESIDUE
METHODS 2540C[1] and 160.1[2] (Gravimetric, Dried at 180 C)

PURPOSE:

The purpose of this method is the determination of the concentration of dissolved matter in a liquid sample.

APPLICATION:

This method is applicable to drinking, surface, and saline waters, domestic and industrial wastes. It is also applicable to other liquids with vapor pressure approximating that of water. Contact your supervisor before testing non-water materials.

SUMMARY OF METHOD:

A well-mixed sample is filtered through a standard filter. The filtrate is evaporated and dried to constant weight at 180° C.

SAMPLE HANDLING AND PRESERVATION:

Refrigerate at 4° C, to minimize microbiological decomposition of solids. Analysis must be initiated within 7 days of sample collection.

SAMPLE CONTAINERS:

Plastic or glass, with a minimum volume of 500 milliliters.

INTERFERENCES:

Highly mineralized waters containing significant concentrations of calcium, magnesium, chloride and/or sulfate may be hygroscopic and will require prolonged drying, desiccation and rapid weighing. Samples containing a high concentration of bicarbonate will require careful and possibly prolonged drying at 180° C to insure that all the bicarbonate is converted to carbonate. Too much residue in the beaker dish will crust over and entrap water that will not be driven off during drying. Total residue should be limited to about 200 mg.

APPARATUS:

1. MFS GC50 or Whatman 934-AH, filter discs, 4.7 cm or 2.1 cm
2. 4.7 cm glass filter holder
3. Gooch crucibles; 25 ml, 2.1 cm with crucible adapter
4. Suction flask, 500 ml.
5. Beakers - 100 ml for high concentration, 150 ml for low concentration.
6. Drying oven, $180 \pm 2^{\circ}$ C
7. Desiccator.
8. Analytical balance, capable of weighing to 0.1 mg.
9. Graduated cylinders
10. Vacuum Pump

PROCEDURE:

NOTE: Calibrate the balance before each day's use. Record the calibration on the balance calibration sheet.

1. Preparation of beakers: Heat the beaker to $180 \pm 2^{\circ}$ C for one hour. Cool in the desiccator for at least one hour. Store beakers in the dessicator until needed, but not longer than 8 hours. If it will be longer than 8 hours before the beakers will be weighed, repeat heating and cooling procedure. Weigh the beakers immediately before use. Weigh the beakers and record the weight then reweigh the beakers and record the second weight. The two weights must agree within 0.0005 grams. If the two weights do not agree, weigh again a third time. The beakers are not heated and desiccated between the initial weighings. The purpose of the two weighings is to ensure the weights are recorded correctly. The second or last initial weight is used in the TDS calculation.

2. Assemble the filter apparatus. Shake the sample vigorously and quickly pour into a graduated cylinder, measure the aliquot and record the mls. Start the vacuum then pour the measured sample into the filtering apparatus. Rinse the graduated cylinder and filtering apparatus with DI water to ensure the entire sample is rinsed through filter and that no solids remain clinging to the glassware.

3. After filtration is complete, quantitatively transfer the filtrate to the preweighed beaker, rinsing as necessary, and evaporate to dryness in the oven at 103 $\pm 2^{\circ}$ C. Turn up the oven temperature and continue drying the evaporated sample for at least one hour at 180 $\pm$ 2° C. Cool in a desiccator and weigh. Repeat the drying at 180° C and desiccating cycle until a constant weight is obtained. The weight change must be less than 4% of previous weight or the difference is less than 0.0005 g, whichever is less. The last weight is used in the TDS calculation. Record the temperature of the drying oven in the analytical log.

CALCULATIONS:

Calculate TDS as follows:

$$\text{TDS, mg/l} = \frac{(A - B) \times 1{,}000}{C}$$

Where: A = weight of dried residue + beaker in grams
B = weight of beaker in grams
C = volume of sample used in liters

QUALITY CONTROL:

1. A blank sample of deionized water shall be analyzed with every sample batch. The blank is used as an indicator of the effectiveness of the drying, desiccating, and weighing. A high blank, > 0.0010 grams, should be considered as a warning flag, indicating the possible need for reanalysis of the samples.

2. Samples shall be duplicated at an overall rate of 10% or a minimum of one per batch whichever is more frequent. The acceptance limits are </= 20% RPD for samples with concentrations greater than five time the reporting limit (RL) or an absolute value difference of +/- the RL for samples with concentrations less than or equal to five times the RL.

3. A Laboratory Fortified Blank (LFB) shall be analyzed with every batch The current LFB acceptance limits are 80-120%. (NOTE: This is the control limit in place as of the writing of this SOP. Refer to the QA Manual for the most current limits.)

4. A control sample purchased from an outside source, such as ERA, should be analyzed once per month.

5. Compare measured TDS with calculated TDS (sum of Ca, Mg, Na, K, Cl, SO4, and 0.6 Alk). If >20% difference, see your supervisor.

REFERENCES:

1. *"Standard Methods for the Examination of Water and Wastewater"* 18th Edition, Method 2540C

2. *"Methods for the Chemical Analysis of Water and Wastes"* EPA-600/4-79-020, March 1983, Method 160.1

Reviewed by: 4-11-01 Analyst

4-17-01 Analyst

4-6-01 Quality Assurance Coordinator

4/6/01 Laboratory Manager

tds.sop

TDS
TEST NOTES

Revision: 02-0596

STANDARD OPERATING PROCEDURE
for

CHLORIDE BY MERCURIC NITRATE TITRATION METHOD 325.3

PURPOSE:

This method is used to determine the amount of chloride present in a sample.

SUMMARY OF METHOD:

An acidified sample is titrated with mercuric nitrate using a diphenylcarbazone-bromophenol blue indicator. The end-point of the titration is the formation of the purple (blue-violet) mercury diphenylcarbazone complex. Xylene cyanol FF serves as a pH indicator and end-point enhancer. Increasing the strength of the titrant extends the range of measurable chloride concentrations.

INTERFERENCES:

Bromide and iodide are titrated with $Hg(NO_3)_2$ in the same manner as chloride. Chromate, ferric, and sulfite ions interfere when present in excess of 10 mg/l.

SAMPLING AND PRESERVATION:

1. Collect 250-1000 mls of sample into glass or polyethylene bottles.
2. The samples are not preserved and are stored at 4°C until analysis.
3. The analysis must be conducted within 28 days of sampling.

APPARATUS:

1. Burets - 50 ml standard buret and 10 ml microburet
2. Magnetic stirrer
3. Teflon stir bar
4. Laboratory glassware, beakers, graduated cylinders, pipets
5. Plastic "solo" cups
6. 1 ml repipet gun

REAGENTS:

1. Standard sodium chloride, 0.025 N: Dissolve 1.4613 grams ±0.0002 grams sodium chloride (dried at 600°C for 1 hour) in chloride-free water in a 1 liter volumetric flask and dilute to the mark. 1 ml = 886.5 μg Cl = 886.5 mg/l Cl.

2. Nitric acid (HNO_3) solution, 3 ml HNO_3 + 997 ml deionized water.

3. Sodium Hydroxide (NaOH) solution, 10 grams NaOH to 1 liter of deionized water.

4. Hydrogen peroxide (H_2O_2) 30%.

5. Mercuric nitrate titrant (0.141 N): Dissolve 25 grams $Hg(NO_3)_2 \bullet H_2O$ in 900 ml of deionized water acidified with 5.0 ml conc. HNO_3 in a 1 liter volumetric flask and dilute to the mark with deionized water. Filter if necessary. Standardize against standard sodium chloride solution (1) using the procedure given below. Store in a dark bottle.

6. Mercuric nitrate titrant (0.0141N): Pipet 100 mls of the 0.141N titrant into a 1000 ml volumetric flask. Acidify with 0.25 ml conc. HNO_3 and dilute to mark with deionized water. Standardize against standard sodium chloride solution (1). Store in a brown bottle.

7. Mixed indicator reagent: Dissolve 0.5 grams crystalline diphenylcarbazone and 0.05 grams bromophenol blue powder in 75 ml 95% ethanol in a 100 ml volumetric flask and dilute to the mark with 95% ethanol. Store in brown bottle and discard after 6 months.

8. Xylene cyanole FF solution: Dissolve 0.005 grams of xylene cyanole FF dye in 95% ethanol or isopropanol in a 100 ml volumetric and dilute to the mark with 95% ethanol or isopropanol. This solution is used as an indicator enhancer.

9. Hydroquinone Solution: Dissolve 1 gram of purified hydroquinone in deionized water in a 100 ml volumetric flask, then dilute to the mark.

10. Stock Chloride Solution, ~~10,000~~ 5000 mg/l

    Dissolve 8.2419 grams NaCl, dried at 600°C for 1 hour, in approximately 900 mls deionized water in a 1 liter volumetric flask. Dilute to 1000 mls with deionized water and mix well. Prepare fresh every three months.

11. Chloride Spiking Solution, 1000 mg/l

    Pipet 10 mls of stock solution into approximately 75 mls of deionized water in a 100 ml volumetric flask. Dilute to 100 mls with deionized water and mix well. Prepare fresh monthly.

12. Laboratory Fortified Blank, 50 mg/l

    Pipet 50 mls of chloride spiking solution into a 1000 ml volumetric flask. Dilute to volume with deionized water and mix well. Prepare fresh monthly.

Note: A 1000 mg/l combined chloride/sulfate standard is prepared for the autoanalyzer. It is acceptable to use this previously prepared combined standard to make the working chloride solution.

PROCEDURE:

1. Standardization of the mercuric nitrate titrant (0.0141N).

   - Pipet three 5 ml aliquots of the standard sodium chloride. Add 10 mg (0.010 grams) of sodium bicarbonate ($NaHCO_3$) to each aliquot and dilute to 100 mls with deionized water. Titrate the three aliquots per the procedure given below.

   - This solution must be restandardized at a minimum of every 6 months.

   - Calculate the normality as follows:

$$\text{N-mercuric nitrate} = \frac{\text{Aliquot} \times 0.025\text{N}}{\text{mls titrant}}$$

2. Standardization of the mercuric nitrate titrant (0.141N).

   - Pipet three 25 mls aliquots of the standard sodium chloride and dilute to 50 mls with deionized water. Titrate the three aliquots per the procedure given below.

   - This solution must be restandardized at a minimum of every 6 months.

   - Calculate the normality as above.

3. Sample Titration

   - Measure 5 to 100 mls of sample, depending on the expected chloride concentration. Aliquots of less than 50 mls should be diluted to 50 mls with deionized water prior to titration.

   - Add 0.5 mls of the mixed indicator reagent and stir on the magnetic stirrer.

   - If a blue violet or red color appears, add the dilute HNO_3 solution dropwise until the color changes to yellow.

   - If a yellow or orange color forms immediately on addition of the mixed indicator, add NaOH solution dropwise until the color changes to blue-violet; then add HNO_3.

   - Add 1 ml excess HNO_3 solution.

   - Titrate with the 0.0141N mercuric nitrate until a permanent blue-violet color forms. Record the mls of titrant used.

   - The xylene cyanol FF solution may be added with the indicator to sharpen the end-point. The color will be different so practice runs should be made.

   - Use the stronger 0.141N mercuric nitrate titrant to titrate samples very high in chloride (greater than 1000 mg/l Cl).

   - Titrate a blank of deionized water using the above procedure. The blank aliquot needs to be equal to the sample aliquot after dilutions.

4. Additional steps to eliminate particular interferences:

   - If chromate is present and iron is not present, the end-point may be difficult to detect. (Olive-purple color)

   - If chromate is present at >100 mg/l and iron is not present, add 1 ml of fresh hydroquinone solution, then titrate.

   - If ferric ion is present, use a volume containing no more than 2.5 mg of ferric ion or ferric ion plus chromate ion. Add 2 ml fresh hydroquinone solution, then titrate.

   - If sulfite ion is present, add 0.5 ml of H_2O_2 solution to 50 ml sample and mix for 1 minute, then titrate.

CALCULATION:

$$\text{mg/l Cl} = \frac{(A-B)N \times 35{,}450}{\text{mls of sample}}$$

where: A = mls titrant for the sample
B = mls titrant for the blank
N = normality of the mercuric nitrate titrant

mg/l NaCl = mg/l Cl x 1.65

QUALITY CONTROL:

1. Analyze a laboratory control sample (ERA) with every sample batch. The obtained value must be within the ERA acceptance limits.

2. A laboratory fortified blank should be analyzed with every sample batch and again after every 20 chloride determinations. The obtained value must be ±10% of the true value.

3. Perform a duplicate analysis on 10% of samples. The allowable range of duplication is given in the Maxim Precision and Accuracy Report.

4. Perform spike analysis on 10% of the samples. The allowable spike recovery control limits are given in the Maxim Precision and Accuracy Report.

REFERENCES:

1. Standard Methods for the Examination of Water and Wastewater, 18th Edition.

2. Environmental Protection Agency 600/4-79-020, "Methods for Chemical Analysis of Water and Wastes," Method 325.3.

Reviewed by:	Hank Bottoto 5-16-96	Analyst
	Carol Corder 6-21-96	Analyst
	Denise Jensen 5-14-96	Quality Assurance Coordinator
	[illegible] 9/25/96	Laboratory Manager

CHLORIDE

TEST NOTES

STANDARD OPERATING PROCEDURE
for

SULFATE
Gravimetric- Method 375. 3[1]
Automated Colorimetric -Method 375.2[1,2], 9036[3]
for Water and Soils

SCOPE & APPLICATION

This method is applicable to drinking, surface and ground water, industrial wastes and soil extracts. The gravimetric method is most accurate for sulfate concentrations above 10 mg/l. The applicable range for colorimetric method is 5-200 mg/l SO_4. This range can be extended by changing the detector sensitivity or by sample dilution.

SUMMARY OF METHOD

GRAVIMETRIC:

Sulfate is precipitated as barium sulfate in a hydrochloric acid medium by the addition of barium chloride. After a period of digestion, the precipitate is filtered, dried, and weighed as $BaSO_4$.

AUTOMATED COLORIMETRIC:

In the pH range of 2.5-3.0, sulfate ions react with a barium-methylthymol blue complex (Ba-MTB) (equation1). The analytical stream is then made highly basic (pH 12.5-13.0). At this pH, the absorbance maximum for the Ba-MTB complex is 610 nm while that of free MB is 460 nm. Given that the molar concentrations of barium and MTB are approximately equal, and that the maximum sulfate concentration to be measured does not exceed the concentration of the Ba-MTB complex, the sulfate concentration is directly proportional to the free MTB concentration measured at 460 nm as shown in Equation 1. The sulfate calibration curve is nonlinear. This has been attributed to 2 factors: formation of binuclear barium-MTB complex and impurities in commercially available MTB dye.

$BaMTB^{4-} + SO_4^{2-} \xrightarrow{pH\ 2.5\text{-}3.0} Ba\,SO_4 \downarrow MTB^{6-}$ (Equation 1)

SAMPLE HANDLING AND PRESERVATION

Refrigerate waters at 4°C . Sample holding time is 28 days. Soils should be dried and processed.

INTERFERENCES

GRAVIMETRIC

1. High results are obtained for samples that contain suspended matter, nitrate, sulfite, and silica. Therefore, proper filtration of samples is imperative.

2. Alkali metal sulfates frequently yield low results. This is especially true of alkali hydrogen sulfates. Occlusion of alkali sulfate with barium sulfate causes the substitution of an element of lower atomic weight than barium in the precipitate. Hydrogen sulfate of alkali metal acts similarly and decomposes when heated. Heavy metals such as chromium and iron cause low results by interfering with complete precipitation and by formation of heavy metal sulfates.

AUTOMATED COLORIMETRIC

1. Multivalent cations, such as calcium, magnesium, and aluminum that would otherwise interfere, are removed with an ion exchange column. Samples with pH values less than 2 must be neutralized to prevent the elution of cations from the ion exchange resin. Turbid samples must be filtered or centrifuged prior to analysis.

APPARATUS

1. Hot plate

2. Drying oven, equipped with thermostatic control

3. Desiccator

4. Analytical balance, capable of weighing to 0.0001 g.

5. Filter paper for filtering extracts &/or samples: MFS 2, 235, 5C, & 0.45 μm membrane.

6. Filter paper for gooch crucibles for gravimetric determination: glass fiber, 2.1 cm -MFS GC50 22 cm.

7. Centrifuge for help in soil extraction filtration

8. Filter funnels.

9. Vacuum filtration apparatus

10. Polyethylene bottles, 100 & 200 ml volume, with lids

11. Gooch Crucibles

12. Model 3590 Alpkem Flow Solution:
    502 A pump
    503 Cartridge heater
    509 Power distribution Module
    510 Monochromator detector

13. Astoria Pacific Flow Analyzer
    Dell computer with FASPac 1.34 Software
    311 xyz sampler

14. Ion exchange column, Astoria Pacific #303-B510-00

REAGENTS

GRAVIMETRIC

1. Methyl orange indicator - Dissolve 0.5 g. methyl orange in 1 liter deionized water. Store at room temperature in HDPE bottle. Dilute approximately 100 ml of this concentrate to 500 ml with deionized water. (Do not need to be exact.)

2. Hydrochloric acid, HCl, concentrated

3. Barium chloride solution, 10%: Dissolve 200 g $BaCl_2 \cdot 2H_2O$ in 2 liter of deionized water in a 2.5 liter bottle. (Note: An empty, well rinsed, 2.5 liter HCl bottle may be used. Do not use an old H_2SO_4 bottle.) Let sit for at least 24 hours before use. Filter if necessary.

AUTOMATED COLORIMETRIC

NOTE: De-gas all reagents in sonicator before use.

1. Stock barium chloride solution: Dissolve 1.526 g $BaCl_2 \cdot 2H_2O$ in 1 liter deionized water. Store at room temperature in HDPE bottle. Stable indefinitely.

2. Hydrochloric Acid, 1 N: Carefully add 42.6 mls of hydrochloric acid to approximately 450 mls deionized water. Dilute to 500 mls. Store at room temperature in HDPE bottle. Stable indefinitely.

3. Methylthymol blue reagent: Dissolve 0.236 g methylthymol blue in 50 mls of stock barium chloride solution in a 1 liter amber bottle. Add 142 mls deionized water and 8 mls 1.0 N HCl. Dilute to 1 liter with ACS grade ethanol. Store at room temperature. Stable for 1-2 weeks. Prepare fresh reagent if a decrease in sensitivity is noticed.

4. Stock Sodium hydroxide-10 N: Cautiously add 400 g NaOH to approximately 700 mls deionized water in 1 liter HDPE bottle. Shake and cool by running under cold tap water. When cool, dilute to 1 l. Prepare monthly. **CAUTION: This reaction creates a lot of heat!**

5. Sodium hydroxide-0.18 N: Add 9 mls of 10 N NaOH to approximately 450 mls deionized water in 500 ml HDPE bottle. Dilute to volume. Store at room temperature. Stable for 1 week.

6. Diluent: Add 0.4 mls 1000 mg/l SO_4 calibrant to approximately 900 mls deionized water in 1 liter HDPE bottle. Add ½ ml Brij-35, 30%. Dilute to volume. Store at room temperature. Stable for 1 week.

7. Sampler wash: deionized water.

8. Cleaning solution, buffered EDTA, 4%: Dissolve 6.75 g ammonium chloride in approximately 800 mls deionized water in a 1 liter amber bottle. Add 57 mls ammonium hydroxide, mix. Add 40 g Disodium EDTA, mix. Store at room temperature. Stable indefinitely.

9. Cation Exchange Resin: DOWEX HCR-W2, Na Form, Spherical Beads 16-40 mesh, JTB 1928-01.

PROCEDURES

GRAVIMETRIC

Soils

1. Soil Extraction: For best results, soils should be dried and processed. Place 20 grams ± 0.05 g. soil in a clean polyethylene bottle. Add 200 mls deionized water, seal the bottle, place on a shaker and shake for at least 1/2 hour.

   Note: **Use a sufficient amount of soil, but not necessarily 20 g. Ten g. soil and 100 mls DI H_2O is acceptable too. The soil to DI water ratio should be 1g/10 mls.**

   Let the soil settle to the bottom of the bottle, approximately 1 hour.

2. Filtration of Soils: Centrifuge the extract for 5 to 10 minutes. Then filter extract through #235 filter paper to remove as much soil as possible. If all particulates have not been removed by this process, filter extract through a 0.45 µm membrane filter with vacuum filtration. If this still gives an extract that is not clear, measure and record volume of extract. Pour into a labeled 250 or 400 ml beaker. Add a small amount of methyl orange indicator and adjust the acidity to a pH of 4.5 - 5.0 by adding conc. HCl until the indicator turns pink.

Heat the solution until warm and particles seem to coagulate. Cool, re-filter through a fast filter (i.e. GC50 4.7 cm) using filter funnel apparatus. Rinse beaker into filter funnel and rinse filter with 2 portions of deionized water. Pour filtrate back into beaker. Adjust volume of liquid in beaker to approximately 200 mls using deionized water. Use initial volume for measurement. No need to re-measure. Proceed with step 4, omitting methyl orange and addition of HCl.

For soil extracts that initially filter clear, measure, record, and pour filtrate into a labeled 250 or 400 ml beaker. Adjust volume of liquid in beaker to approximately 200 mls using deionized water (no need to measure).

Waters

3. Filtration of water: Filter waters through a #235 filter. This should be sufficient to remove all the particulates. If all particulates have not been removed, then re-filter through a 0.45 µm filter. See table below for approximate volume of sample to use. Measure, record, and pour filtrate into a labeled 250 or 400 ml beaker. Adjust volume of liquid in beaker to approximately 200 mls using deionized water (no need to measure).

Conductivity of Sample umhos	Volume of Sample to Use mls
<100	150-200
100-750	75-150
750-5000	25-75
>10,000	2-10

4. Precipitation of Barium Sulfate: Add a small amount of methyl orange indicator and adjust the acidity with conc. HCl to a pH of 4.5 - 5.0 by adding conc. HCl until the indicator turns pink.

   Heat on a hot plate to boiling and add 10 mls of $BaCl_2$ solution. If the barium sulfate precipitation is very heavy, either start over with a smaller aliquot of sample or add more barium chloride solution.

   NOTE: It will be more difficult to filter this sample in step 6 if there is excessive amounts of barium sulfate precipitate.

   Digest the precipitate at 80-90°C for at least 2 hours. Do not let the volume get below 50 mls. Add more deionized water if necessary. Cool overnight, if necessary. Do not let sit for more than overnight.

5. Initial Preparation and Weighing of Gooch Crucible: Wash and rinse gooch crucibles. Seat a MFS GC50 2.1 cm glass fiber filter (or equivalent) in each crucible. Place the filter rough side up in the crucible and rinse with approximately 10 mls of deionized water using vacuum filtration. Dry the filters an oven at least 104°C. Cool in a desiccator. Weigh to the nearest 0.1 mg. Record weights.

6. Filtration and Weighing of Precipitated Samples: Filter the precipitated sample through the preweighed gooch crucible, using vacuum filtration. Be certain to transfer all precipitate from the beaker to the crucible. Use a rubber policeman to aid in complete transfer of precipitate. Rinse beaker and rubber policeman 2 times with a small amount of distilled water.

   Dry the crucible in a 180°C oven, cool in a desiccator and weigh to the nearest 0.1 mg. Record the weight.

CALCULATIONS for GRAVIMETRIC

Waters: mg/l SO_4 = ((grams BaSO4 * 411,500)/mls sample)

Soils: $\% SO_4 = \frac{[((\text{grams BaSO4}*411{,}500)/\text{mls sample}) * (\text{mls total extract/gms sample})]}{10{,}000}$

AUTOMATED COLORIMETRIC

Soil & Water Preparation

1. Soil Extraction: For best results, soils should be dried and processed. Place 10 g. ± 0.05 g. soil in a clean polyethylene bottle. Add 50 mls deionized water, seal the bottle, place on a shaker and shake for at least 1/2 hour.

2. Filtration of Soils: Either centrifuge the extract for 5 to 10 minutes and filter extract, or just filter extract through a #235 filter paper. Filtrate should be clear. Proceed as with waters.

3. Filtration of waters: Filter the water sample through a #235 filter. This should be sufficient to remove all the particulates. If not, use a #5B or 5C filter. Filtrate should be clear.

Calibrants

1. Stock Calibrant 10,000 mg/l Sulfate (500 mls)

Sodium Sulfate (Na_2SO_4), dried at 110°C	7.3935 gms
Chloroform ($CHCl_3$)	1 drop
Deionized water	

   Dissolve 7.3935 gms of Na_2SO_4 in approximately 400 mls deionized water contained in a 500 ml volumetric flask. Dilute the solution to volume with deionized water. Mix well. Preserve the solution with 1 drop $CHCl_3$. Store at 4°C. Solution is stable for 3 months. This solution will be used to prepare the standards and the instrument performance check (IPC). Prepare a second solution using another source of Na_2SO_4 to prepare quality control sample (QCS).

2. Intermediate Calibrant 1000 mg/l Sulfate (200 mls STD, 100 mls QCS)

   Volumetrically pipet 20 mls stock calibrant into a 200 ml volumetric flask. Dilute to volume with deionized water. For QCS, pipet 10 mls into a 100 ml volumetric flask and dilute to volume with deionized water.

3. Working Calibrants

   Working calibrants may be prepared to cover the desired range by adding the appropriate amounts of intermediate/working calibrant to 100 mls volumetric flasks that contain approximately 50 mls of deionized water. Dilute the solutions to 100 mls with deionized water. Prepare sulfate calibrants weekly. Store at 2-6°C.

Calibrant Concentration, mg/l	Preparation to 100 ml volume
200	20 mls of 1000 mg/l
150	15 mls of 1000 mg/l
100	10 mls of 1000 mg/l
50	5 mls of 1000 mg/l
25	25 mls of 100 mg/l
15	15 mls of 100 mg/l
5	5 mls of 100 mg/l
90(QCS)	9 mls of 1000 mg/l

   NOTE: Prepare a second solution of 100 mg/l for IPC. Add 0.06 gms $CaCl_2$ to IPC before diluting to volume . This is for checking efficiency of ion exchange column.

Preparation of ion exchange column

1. Wash resin contained in 4oz solo cup several times with deionized water, decanting after each rinse. Cover completely with deionized water and sonicate slurry for 15 to 20 minutes. Store prepared resin at room temperature. Slurry is stable for several months. Make sure is covered with deionized water.

2. Plug one end of glass column with glass wool. Using a syringe attached at the end with the glass wool plug, pull the slurry into the column until the column is full of slurry. Make sure the slurry is compact and that it has no air bubbles.

Colorimetric Analysis

1. Set up the cartridge as shown in the SFA flow diagram. Do not install the ion exchange column at this time.

2. Turn power on to all units. Allow the EDTA buffer solution to flow through the system for 5 minutes. Place reagent lines into diluent and allow to flow through system for 5 minutes. Place reagent line into appropriate reagents. Install ion exchange column at this time. Before beginning analysis, run the standard line through at least once to obtain a stable baseline. Do this as instructed below.

3. For computer setup see SOP for FASPac Flow Analyzer Software computer operation.

4. Select the appropriate parameters for the computer, detector, and sample:

Range		5-200 mg/l
Pump speed		60%
Tubes	Diluent	grey/grey
	Air #1	orange/white
	Sample	black/black
	Sample pulloff	orange/yellow
	Pull off #1	red/red
	Pull off #2	orange/yellow
	MTB	white/white
	Air #2	orange/yellow
	Pull off #3	red/red
	NaOH	orange/yellow
	Sample in	blue/yellow
	Sample out	green/green
Detector wavelength		460 nm
Rise time		3 sec
Range		0.2 AUFS
Sampler	Rate	55/hr
	Sample time	20
	Wash time	50
	Pecking	on
Computer		0-1 volt

5. Load sampler tray with calibrants, blanks, samples and QC samples.

6. To begin sampling and data collection, select RUN on the computer. When sampling and data collection is complete, select END to stop data collection. To condition column just run the saved configuration. This should be sufficient to stabilize baseline.

7. Print out a calculated report and peak chart.

CALCULATIONS FOR AUTOMATED PROCEDURE

Water: mg/l SO_4 = Conc. obtained from calibration curve * dilution factor (if any)

Soil: % SO_4 = ((mg/l from cal. Curve * (mls extract/grams sample) * dil factor] / 10,000))

QUALITY CONTROL:

1. Calibrate the instrument with each use. A minimum of three standards and a blank shall be used. The linear calibration correlation coefficient acceptance criteria is 0.995 or greater.

2. The calibration shall be verified by the analysis of QCS (quality control sample) also know as an ICV (initial calibration verification). The QCS/ICV is prepared from a separate source than the standards. The acceptance limits are 90-110%. If the QCS/ICV is not within these limits the source of the problem must be identified and corrected before analysis of samples may begin.

3. The calibration is verified throughout the run by the analysis of an IPC (instrument performance check) also know as a CCV (continuing calibration verification). The IPC/CCV is prepared from the same stock solution as the calibration standards but diluted separately from the calibration standards. The IPC/CCV concentration should be at the mid point of the calibration curve. The IPC/CCV is to be analyzed at the beginning of the run, after every 10 samples, and at the end of the run. The acceptance limits are 90-110%. If an IPC/CCV is not within acceptance limits, reanalyze all samples following the last acceptable IPC.

4. A calibration blank (CB) shall be analyzed after every IPC. The CB acceptance limits are as follows; SDWA - less than the MDL, CWA/NPDES/RCRA – less than the RL.

5. A LRB (laboratory reagent blank) shall be analyzed once per batch of up to 20 samples. The LRB acceptance limits are as follows; SDWA - less than the MDL, CWA/NPDES/RCRA – less than the RL. For soils use a sand and deionized water extract as the LRB. (Note: Use sand that has NOT been muffled. Muffled sand may be contaminated with sodium sulfate.)

6. A LFB (laboratory fortified blank) shall be analyzed once per batch of up to 20 samples. The LFB is prepared from the same source as the calibration standards. The LFB control limits are as follows; SDWA – 90-110%, CWA/NPDES – 85-110%. (NOTE: These control limits are those in place as of the writing of this SOP, refer to the QA manual for the most current limits). If the LFB is not within these limits the source of the problem must be identified and corrected before analysis of samples may begin. Prepare a soil LFB mixing 50 mls of 1000 mg/l sulfate standard with 100 grams of sand (not muffled) and drying. The resulting dried sand will have a sulfate concentration of 0.05%. The soil LFB acceptance limits are 85-145%.

7. A LFM (laboratory fortified matrix) also known as a MS (matrix spike) shall be analyzed at a rate of 10%, once every ten samples or once per batch, whichever is more frequent. The LFM/MS should be prepared from the same source and at the same concentration as the LFB. The acceptance limits are as follows; SDWA – 90-110%, CWA/NPDES – 85-110%. (NOTE: These control limits are those in place as of the writing of this SOP, refer to the QA manual for the most current limits). If the recovery of a LFM/MS is not within these limits and the LFB is shown to be in control, the recovery problem is judged to be matrix related and the results may be accepted.

8. A duplicate sample is to be analyzed at a rate of 10%, once every ten samples or once per batch, whichever is more frequent. The duplicate acceptance limits are </= 20% RPD for samples with concentration greater than five times the RL or an absolute value difference of +/- the RL for samples with concentrations less than or equal to five times the RL.

9. It is recommended that a certified laboratory control sample obtained from an outside source, such as ERA, be analyzed once per month.

REFERENCES

1. EPA/600/4-79-020 *"Methods for Chemical Analysis of Water and Wastes"* Methods 375.2 and 375.3.

2. EPA/600/R-93/100 *"Methods for the Determination of Inorganic Substances in Environmental Samples"* Method 375.2

3. SW-846 *"Test Methods for Evaluating Solid Waste"* 3rd Edition with updates, Method 9036

4. USDA Agriculture Handbook No. 60, *"Diagnosis and Improvement of Saline and Alkali Soils"*, Method 3C.

5. Alpkem Flow Solution Methodology

6. "FASPac Flow Analyzer Software Package", User's Manual, version 1.34

7. "Astoria Analyzer Sample 311, Rack Model Operation Manual.

Reviewed by: _____ Analyst

_____ Analyst

_____ 6-22-01 Quality Assurance Coordinator

_____ 6/27/01 Laboratory Manager

SULFATE

TEST NOTES

Sulfate, 5.0-200mg/L, Flow Diagram, SFA

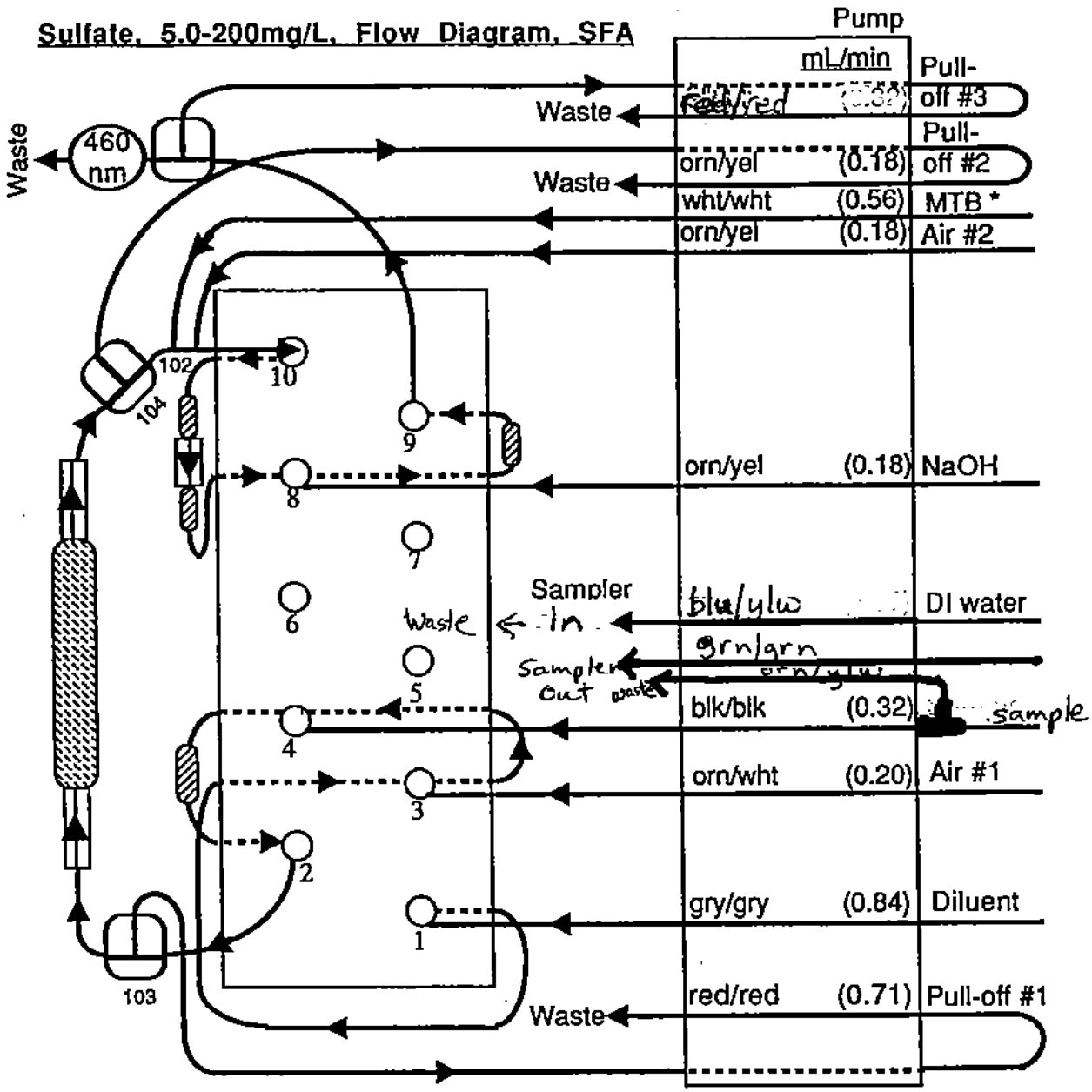

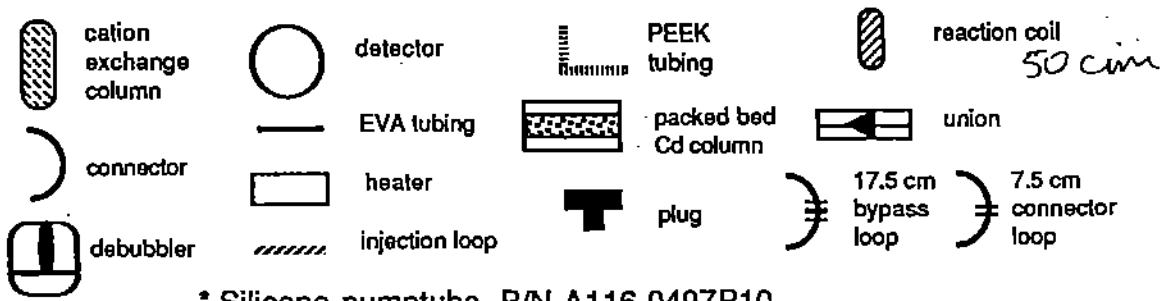

* Silicone pumptube, P/N A116-0497P10

Revision: 03-0396

STANDARD OPERATING PROCEDURE
for

Total Suspended Solids
Method 160.2
(Gravimetric, Dried at 103-105°C)

PURPOSE:

The purpose of the total suspended solids test is to determine the concentration of materials suspended in a liquid sample.

APPLICATION:

This method is applicable to all liquids that are filterable through glass fiber filter. It is intended for use with water samples, but may be applied to other liquids upon approval of the laboratory supervisor.

SUMMARY:

A measured volume of sample is filtered using vacuum suction through a glass fiber filter seated in a porcelain crucible. The crucible with filter shall be preweighed. The filter and crucible are dried at 103-105 degrees C and reweighed. The weight gain is compared to the volume of sample filtered and results are reported in milligrams per liter (mg/l).

SAMPLE HANDLING AND PRESERVATION:

Samples shall be collected in plastic or glass containers (500 ml minimum). They shall be stored at 4 degrees C. The analysis must be initiated within seven days of the collection date.

APPARATUS:

- Graduated cylinders
- Analytical balance accurate to 0.1 milligrams
- Gooch crucibles (25 to 30 ml volume) with crucible adapter
- Oven capable of maintaining 104 ± 1 degrees C
- Glass fiber filters 934-AH or equivalent (2.1 cm)
- Suction flask
- Vacuum source
- Desiccator

REAGENTS:

- Deionized Water

PROCEDURE:

1. Preparation of glass fiber filter disc: Place the glass filter into bottom of a suitable Gooch crucible with wrinkled surface up. While vacuum is applied, wash the disc with deionized water. Remove all traces of water by continuing to apply vacuum after water has passed through. Remove both crucible and filter and dry in an oven at 103-105°C for one hour. Remove to desiccator and store until needed. Weigh and record weights immediately before use. Weigh each crucible a second time, recording weights again.

2. Selection of Sample Volume: Sample appearance and past sample performance will assist the analyst in selecting the proper sample volume. Some general guidelines are:

   - If the sample appears clean, measure and filter at least 250 mls.

   - Some clients require low level TSS. Filter 1000 mls for those clients. When filtering a 1000 ml volume, weigh the full sample bottle, pour the sample from the bottle to the crucible, shaking vigorously between each pour. Weigh the empty bottle. The weight difference is the mls used.

   - If the sample contains particulates, filter 10 to 100 mls, depending on appearance.

   The entire sample measured into the graduated cylinder must be filtered. If the filter clogs before all the measured sample has been filtered, discontinue the analysis and reanalyze with a smaller sample volume.

   Hint: When the analyst is unsure how much sample volume to use, start with a small volume and continue filtering additional aliquots until a sufficient residue appears to be on the filter.

3. Assemble the filtering apparatus and begin suction.

4. Shake the sample vigorously and quantitatively transfer the predetermined sample volume to the filter using a graduated cylinder. Remove all traces of water by continuing to apply vacuum after sample has passed through.

5. With suction on, wash the graduated cylinder, filter, non-filterable residue and gooch crucible wall with three portions of deionized water, allowing complete drainage between washing. Remove all traces of water by continuing to apply vacuum after water has passed through.

6. Remove the crucible and filter from crucible adapter. Dry at least one hour at 103-105°C. Record the oven temperature and date in the lab notebook or computer. Cool in a desiccator, weigh and record weights.

7. Repeat step 6. Do not need to record oven temperature this time.

CALCULATIONS:

1. Calculate non-filterable residue as follows:

$$\text{Non-filterable residue, mg/l} = \frac{(A - B) \times 1{,}000}{C}$$

where:

A = weight of crucible and filter + residue in grams
B = weight of crucible and filter in grams
C = liters of sample filtered

QUALITY CONTROL:

1. A blank sample of deionized water shall be analyzed with every sample batch. The blank is used as an indicator of the effectiveness of the drying, desiccating, and weighing. A high blank should be considered as a warning flag, indicating the possible need for reanalysis of the samples.

2. Samples shall be duplicated at an overall rate of 10%. Guidelines given in the Maxim QC Acceptance Criteria for TSS should be used in determining the allowable range of duplication.

3. A laboratory control made from Celite 545 will be analyzed with each batch. For a control of 20 mg/l TSS, measure 0.020 grams Celite 545 (dried at 103°C for 1 hour). Dilute to 1000 mls volumetrically with deionized water.

REFERENCE:

1. Standard Methods for the Examination of Water and Wastewater, 16th Edition, Method 209C (1985).

2. Methods for Chemical Analysis of Water and Wastes, 600/4-79-020, Method 160.2 (1983).

Reviewed by: _____ Analyst

_____ Analyst

_____ Quality Assurance Coordinator

_____ Laboratory Manager

TSS

TEST NOTES

Revision: 03-0102

STANDARD OPERATING PROCEDURE
for

METALS DIGESTION

PURPOSE:

This Standard Operating Procedure (SOP) will outline the uniform procedures for the acid digestion of surface water, groundwater, soils, oils, and solid wastes for analysis by Flameless Atomic Absorption Spectroscopy (AA), Inductively Coupled Argon Plasma Spectroscopy (ICP), Inductivity Couple Argon Plasma Mass Spectroscopy (ICP-MS).

APPLICATION:

Acid digestion of a wide variety of client samples received by the laboratory is required prior to being spectrographically analyzed for any of the requested metals. The original sample matrix, metals requested, and analysis method constitute the primary factors considered when determining the implementation of one or more of the following acid digestion methods:

1. Method 200.7 - Total digestion of water for ICP

2. Method 200.7 - Total recoverable digestion of water for ICP

3. Method 200.8 – Total recoverable digestion of water for ICP-MS

4. Method 3005A - Total recoverable digestion of water for ICP and AA

5. Method 3010A - Total digestion of water for ICP and AA

6. Method 3020A - Total digestion of water for ICP-MS

7. Method 3031 - Total digestion of oil for ICP

8. Method 3050B - Total digestion of soils, solid waste, wipes and filter media for ICP/ICPMS or AA. Note: Method 3050B digestion method is substituted for the digestion of filter cassettes in place of perchloric acid methods 7300 and 7900.

9. Method CLP-A2 - Digestion of water for CLP analysis by ICP

10. Method CLP-B1 - Digestion of soil for CLP analysis by ICP

SUMMARY OF METHODS:

The sample, depending upon sample matrix type, will either be accurately weighed to four places (0.0000), or measured with a graduated cylinder or graduated digestion vessel and subsequently transferred to the digestion vessel. Acid is added to the sample, which is digested per the appropriate method. Upon completion of the digestion, the sample is cooled to room temperature and diluted with deionized water to the appropriate final volume in a graduated cylinder or graduated digestion vessel. It is then transferred to a properly identified container if diluted in a graduated cylinder. Identification should reflect sample ID number, digestion batch number, date of digestion, digestion method, and whether it is a duplicate or spike (if spike, print the number of milliliters and concentration of the spiking solution on the cup). This information should be on both the lid and body of the cup, i.e., (last four digits of current accession number) 6839 Dup or 6839 (D-23) or 3005 SPX 2/10, AS 2/1. Finally, it is placed upon a tray to be analyzed.

PRECAUTIONS AND SAFETY:

The acids and hydrogen peroxide used in the digestion of samples are to be handled with a great deal of care and understanding.

1. HYDROCHLORIC ACID (HCL) - Strong corrosive - Use under vent hood only. In liquid form it will cause mild to severe burning of the skin, eyes, and mucous membranes. In gaseous form (fumes) it will cause irritation of skin, eyes, and mucous membranes.

   FIRST AID: Wash effected areas with liberal amounts of cold water. Report serious contact to your supervisor immediately. Acid burns should be treated as any other burn (i.e. scalding or contact with hot object), covered and medicated with an antibacterial ointment (i.e. Neosporin).

2. NITRIC ACID (HNO3) - Powerful oxidizing agent - Poison by ingestion: Corrosive to skin, eyes, mucous membranes, and teeth. Upper respiratory irritation may seem to clear up only to return more severely a few hours later. Exposure to the skin is followed by burning and a yellowing of the effected area.
   FIRST AID: See Hydrochloric Acid.

3. SULFURIC ACID (H_2SO_4) - Poison by inhalation - An eye irritant and extremely irritating corrosive. Toxic to tissue resulting in rapid destruction of tissue. Causing severe burns; which can cause shock, collapse and symptoms similar to those seen in severe burns.
   FIRST AID: See Hydrochloric Acid.

4. HYDROGEN PEROXIDE (30%) (H_2O_2) - A poison by irritation to skin, eyes, and mucous membranes through ingestion, inhalation, and contact: A very powerful oxidizer; vapors, mists, and fumes will cause irritation. Skin irritation is signified by white splotchy spotting.
   FIRST AID: See Hydrochloric Acid.

EQUIPMENT:

1. 100 and 150 ml beakers
2. Plain and ribbed watch glasses
3. 50 ml and 100 ml graduated cylinders
4. 50 ml plastic centrifuge tubes with lids
5. 125 ml plastic sample cups with lids
6. Plastic ribbed covers
7. Pipettes: 1 ml to 10 ml as required
8. Pipette bulb
9. Hot plates
10. 10 ml, 100 ml and 200 ml volumetric flasks
11. Indelible marker
12. Bottle brushes
13. Vinyl gloves
14. Large beaker tongs with sleeves
15. Glass boiling beads
16. Aluminum foil
17. Block digester graduated plastic digestion vessels
18. MOD-Block brand block digester
19. Eppendorf brand automatic pipetter and plastic tips

REAGENTS:

1. Acids: Hydrochloric (HCL), Nitric (HNO3), Sulfuric (H2SO4)

2. 1+1 HCL: Add 1 part HCL to 1 part DI water; mix and allow to cool.

3. 1+1 HNO_3: Add 1 part HNO_3 to 1 part DI water; mix and allow to cool.

   CAUTION: Add acid to water. DO NOT add water to acid as this may result in rapid heat buildup, causing the acid to erupt from the vessel.

4. Hydrogen peroxide 30 % (H2O2)

5. Liquid-Nox soap

6. Q3 deionized water and/or OMNI water

7. Metals Standards

All standard preparations must be recorded in the standard prep log.
All standard preparations must be made in acid cleaned class A glassware. Use acid cleaned pipets.

a) 1000 mg/l lead - NIST Traceable

b) 100 mg/l multi-element CPI – NIST Traceable

c) 10 mg/l spiking solution: Pipette 10 ml of 100 ppm CPI into a 100 ml volumetric flask. Preserve with 5% HNO_3 dilute to volume with Q3 water and mix. For digestions for ICP-MS, pipette using Eppendorf automatic pipetter, 5 mls of 100 ppm CPI into a 50 ml graduated centrifuge tube, previously tarred. Preserve with 2.5 ml conc. HNO_3 and dilute to 50.0 g with Q3 water and mix.

d) 0.50 mg/l spiking solution: Pipette 5 mls of the 10 mg/l spiking solution into a 100 ml volumetric flask. Preserve with 5% HNO_3, dilute to volume with Omni water and mix.

e) 100 mg/l lead spiking solution: Pipette 10 ml of 1000 ppm lead into a 100 ml volumetric flask. Preserve with 5% HNO_3; dilute to volume with Omni water and mix.

NOTE: **Prepare the 10 mg/l standard fresh every time a sample is to be spiked for Boron or Silicon analysis. Both these elements tend to leach out of the borosilicate glassware over time or store 10 mg/l standard in plastic.**

11. LFBs/Spikes: Each sample that is being spiked will be spiked with multi element metals unless otherwise indicated on the metals log. Spiking solution will be added prior to actual digestion and digested with the sample. Add the spike before acid addition. LFBs are prepared using the same concentration of spiking solution, substituting deionized water for the sample. The following concentrations will be used:

50 ml water samples:	add 2 ml of 10 mg/l spiking solution for ICP-MS digests add 5 ml of 10 mg/l spiking solution for ICP digests add 1 ml of 0.50 mg/l spiking solution for 40CFR136 Se digests
Sludges and soils:	add 2 ml of 100 mg/l spiking solution for ICP digests
Oils:	add 2 ml of 100 mg/l spiking solution
Paint Chips and Lead Soils:	add 5 ml of 100 mg/l lead spiking solution

12. Lead Matrices:

1. Filter Cassettes – Prepare the LFB using a blank filter cassette and a liquid spike.

2. Soil – Prepare the LCS with NIST traceable leaded soil. Usually old ELPAT samples are used. Liquid spikes are used for the matrix spikes.

3. Paint Chips – Prepare the LCS with NIST traceable leaded paint chips. Usually old ELPAT samples are used. Liquid spikes are used for the matrix spikes.

4. Wipes – The LCS is prepared by spiking a blank wipe with NIST traceable soil or paint chips (Old ELPATs).

PROCEDURE:

NOTE: All digestion methods are summarized on the Digest Log Check List, Attachment 1.

DIGESTION METHOD 200.7 - Total Digestion for ICP Metals

1. Pour 50 ml sample into 70 ml plastic MOD-Block brand graduated plastic digestion vessel.
2. Add 3 ml conc. HNO_3.
3. Cover tube with plastic ribbed cover, place in MOD-Block block digester already heated to 118°C. NOTE: As per manufacturer, 118°C set on the MOD-Block is equivalent to a stable 95°C sample interior temperature.
4. Evaporate sample to near dryness (2-3 mls).
5. Cool; add 5 ml conc. HNO_3, cover with plastic ribbed cover, and replace in MOD-Block. Continue heating until digestion is complete, adding additional acid if necessary.
6. Evaporate to near dryness (2-3 mls).
7. Cool; add 5.5 ml 1+1 HCl and 8 ml DI H_2O and warm gently for 15 min.
8. Cool; dilute to 50 ml.

DIGESTION METHOD 200.7 - Total Recoverable Digestion for ICP Metals

1. Add 1 ml 1+1 HNO_3 and 5 ml 1+1 HCl to 50 ml sample in a 70 ml plastic MOD-Block brand graduated plastic digestion vessel, cover with plastic ribbed cover.
2. Place in MOD-Block digester already heated to 118°C.
3. Evaporate to approximately 10 mls.
4. Cool; dilute to 50 ml.

DIGESTION METHOD 200.8 - Total Recoverable Digestion for ICP-MS Metals

1. Pour 50 ml sample into a 70 ml plastic MOD-Block brand graduated plastic digestion vessel.
2. Add 1 ml (1+1) HNO_3 and 0.5 ml (1+1HCl).
3. Cover tube with plastic ribbed cover and place in MOD-Block digester already heated to 106°C. NOTE: As per manufacturer, 106°C set on the MOD-Block is equivalent to a stable 85°C sample interior temperature.
4. Evaporate until the volume is reduced to 10 mls, and gently reflux the sample for 30 min.
5. Cool; dilute to 50 ml.
6. NOTE: Sample must be diluted at the instrument to adjust the chloride concentration to a minimum.

DIGESTION METHOD 3005A - Total Recoverable Digestion for ICP and AA Metals

1. Pour 50 ml sample into a plastic MOD-Block brand graduated plastic digestion vessel.
2. Add 1.0 ml conc. HNO_3 and 2.5 ml conc. HCl.
3. Cover with plastic ribbed cover, and place in MOD-Block digester already heated to 118°C. NOTE: As per manufacturer, 118°C set on the MOD-Block is equivalent to a stable 95°C sample interior temperature.
4. Heat until volume is reduced to approximately 10 ml.
5. Cool; dilute to 50 mls.

DIGESTION METHOD 3010A - Total Digestion for ICP and AA Metals, including those for CLP analysis

1. Pour 50 ml sample into a plastic MOD-Block brand graduated plastic digestion vessel.
2. Add 1.5 ml conc. HNO_3.
3. Cover with plastic ribbed cover and place in MOD-Block digester already heated to 118°C. NOTE: As per manufacturer, 118°C set on the MOD-Block is equivalent to a stable 95°C sample interior temperature.
4. Evaporate to 3-5 ml.
5. Cool; add 1.5 ml conc. HNO_3, replace tube in MOD-Block, cover with plastic ribbed cover, and reflux sample, adding additional acid if necessary, until digestion is complete. Evaporate sample to 2-3 mls.
6. Cool; add 5.0 ml conc. HCl, replace tube in MOD-Block, cover with plastic ribbed cover, and heat for 15 min.
7. Cool; dilute to 50 ml or 5 ml if selenium by 7742 is to be determined.

NOTE: If the sample is to be analyzed for arsenic or selenium by Hydride, see steps:
*a) Arsenic pre-run digestion
**b) Selenium pre-run digestion

NOTE: For Se by method 3114C, digest according to 40CFR136 method.
DO NOT perform Se pre-run digestion.

*a) Arsenic Pre-Run Digestion - Method 7062
1. Add 0.1 g L-cysteine to 25 ml 3010A digested sample.
2. Heat in water bath or MOD-Block until dissolved (approximately 20 minutes).
3. Cool.

**b) Selenium Pre-Run Digestion - Method 7742
1. Add 20 ml conc. HCl to 5 ml 3010A digested sample.
2. Heat in water bath or MOD-Block for approximately 30 minutes.
3. Cool; dilute to 50 ml.
4. Account for the 10 dilution factor in the sample result unless the original 3010A digest was concentrated to 5 ml rather than 50 mls.

DIGESTION METHOD 3020A - Total Digestion for ICP-MS Metals

1. Pour 50 ml sample into a plastic MOD-Block brand graduated plastic digestion vessel.
2. Add 1.5 ml conc. HNO_3.
3. Cover tube with plastic ribbed cover, place in MOD-Block digester already heated to 118°C. NOTE: As per manufacturer, 118°C set on the MOD-Block is equivalent to a stable 95°C sample interior temperature.
4. Evaporate sample to 3-5 ml.
5. Cool; add 1.5 ml conc. HNO_3, cover with plastic ribbed cover, place in beaker, and reflux, adding additional acid as needed to complete digestion.
6. Evaporate sample to 3-5 ml.
7. Cool; add approximately 10 ml DI H_2O, mix, and continue to warm for 10-15 minutes. Note: Add 5 ml conc. HCl if Ag is to be determined.
8. Cool; dilute to 50 ml.
9. Sample must be diluted at instrument or standards prepared in same matrix to compensate for matrix differences.

DIGESTION METHOD 3031 - Digestion of Oils for ICP Metals

1. Weigh approximately 1.0 g (± 0.01 g) of sample into a glass beaker.
2. Add 1.0 g potassium permanganate powder, mix until homogenous.
3. Cautiously add 2 ml conc. H_2SO_4 drop wise under a fume hood and stir. When no more fumes are emitted, allow to cool. CAUTION: This reaction is extremely vigorous and exothermic. Use extreme caution when adding sulfuric.
4. Add 2 ml conc. HNO_3 and stir. Allow reaction to complete (where no more fumes are emitted), cool beaker.
5. Add 10 ml conc. HCl and stir. If excess foaming occurs, add water to prevent sample loss. Cool beaker.
6. Heat beaker until there is no further gas evolution (not to exceed 150°C). If excess foaming occurs, either remove beaker from heat or add sufficient water to prevent overflow. The final digestate should be a clear yellow liquid with black or reddish brown particulates.
7. Filter digestate through a Whatman 41 (or equivalent) filter paper and collect in a beaker. (filtrate beaker).
8. Wash digestion beaker and filter paper, while still in funnel, with no more than 5 ml hot HCl to recover Sb, Ba, and Ag.
9. If the sample is to be analyzed for Sb, Ba or Ag, remove filter paper from funnel, place back in beaker. Add 5 ml conc. HCL and heat until paper dissolves (no greater than 150°C). Remove beaker and wash sides with DIH_2O and filter, collecting filtrate in the same filtrate beaker.
10. Heat filtrate to drive off excess HCl. Remove from heat source, cool, dilute to 100 ml.

DIGESTION METHOD 3050B - Digestion of Soils, Sludges, Solids, Wipes and Filter Cassettes for ICP or AA Metals

1. Weigh 1.0 g ±0.05 g dried, homogenized sample (1-2 g for wet samples or 0.2 g for paint samples) into a glass beaker.
2. Add 10 ml 1+1 HNO_3, mix, cover with a watch-glass and heat sample to 95°C for 10-15 minutes.
3. Cool; add 5 ml conc. HNO_3, mix, cover, and heat for 30 minutes, repeat if brown fumes are generated. Continue adding 5 ml conc. HNO_3 and heating until no brown fumes are given off.
4. Evaporate sample to approximately 5 ml or heat at 95°C without boiling for 2 hours.
5. Cool; add 2 ml DIH_2O and 3 ml 30% hydrogen peroxide, and heat until effervescence subsides.
6. Continue to add 30% H_2O_2 in 1 ml aliquots until effervescence is minimal or until the general sample appearance is unchanged. No more than 10 ml 30% H_2O_2 should be added.
7. Heat sample until volume is reduced to 5 ml or heat at 95°C without boiling for 2 hours.
8. Cool; add 10 ml conc. HCl, cover, and warm at 95°C for 15 minutes.
9. Cool; dilute to 100 mls.

   NOTE: If the sample is to be analyzed for Arsenic or Selenium by Hydride, see *a) or **b) steps.

   *a) Selenium Pre-Run Digest
      1. Add 20 ml HCl to 5 ml digested sample in a plastic centrifuge tube.
      2. Heat in water bath for approximately 30 minutes.
      3. Cool; dilute to 50 ml.

      NOTE: All calculations must account for a times 10 dilution.

   **b) Arsenic Pre-Run Digest

      1. Add 0.1 g L-cysteine and 0.5 g urea to 25 ml digested sample in a plastic centrifuge tube.
      2. Heat in water bath until dissolved (≈ 20 minutes).
      3. Cool.

DIGESTION METHOD CLP-A2 - Digestion for CLP Analysis for ICP

1. Pour 50 ml sample into a 70 ml plastic MOD-Block brand graduated plastic digestion vessel.
2. Add 1.0 ml 1+1 HNO_3 and 5.0 ml 1+1 HCL.
3. Cover with a plastic ribbed cover, place in MOD-Block digester already heated to 118°C, and heat for 2 hours. NOTE: As per manufacturer, 118°C set on the MOD-Block is equivalent to a stable 95°C sample interior temperature.
4. Cool; dilute to 50 ml.

DIGESTION METHOD CLP-B1 - Digestion for CLP Analysis of Soil/Solid Waste for ICP

1. Weigh 1,0 g (±0.01 g) dry, homogenous sample into a glass beaker.
2. Add 10 ml 1+1 HNO_3, mix, and cover with watch glass. Heat to 95°C and reflux for 10 minutes.
3. Cool; add 5 ml conc. HNO_3, mix, cover, and reflux for 30 minutes.
4. Cool; add 2 ml DI H_2O and 3 ml 30% H_2O_2. Heat at 95°C until effervescence subsides.
5. Cool; add 30% H_2O_2 in 1 ml aliquots with warming until effervescence is minimal or general sample appearance is unchanged, not to exceed 10 ml total of H_2O_2.
6. Add 5 ml 1+1 HCL and 10 ml DI H_2O to cooled sample, cover and reflux for 10 minutes.
7. Cool; dilute to 100 ml.

QUALITY CONTROL:

1. Each digest batch of not more than 20 sample shall include the following:

    a. Method/Reagent blank – filter cassette and wipe blanks shall contain a blank filter or wipe.
    b. Laboratory control sample / Lab control sample duplicate (LCSD for lead matrices)
    c. Matrix spike (1 per 10) – (Not required for filter cassettes or wipes)
    d. Matrix spike duplicate or duplicate (1 per 10) (Not required for filter cassettes or wipes)
    e. Reporting limit sample (for lead matrices - filters, wipes, soil, paint)

2. Each batch will have a specific batch number assigned to it.

REFERENCES:

1. SW-846 *"Test Method for Evaluating Solid Waste"*, November 1986, Third Edition.

2. EPA/600/R-94-111 "*Methods for the Determination of Metals in Environmental Samples*", Supplement I.

3. Federal Register, 40 CFR Part 136.

4. EPA 600/4-79-020, *"Methods for Chemical Analysis of Water and Wastes."*

5. USEPA Contract Laboratory Program *"Statement of Work for Inorganics Analysis"* ILMO 4.0

Reviewed by:

Barbara Hebert 1/9/02 Analyst

Renee Stepper Analyst

Dennis Jones 1-2-02 Quality Assurance Coordinator

Kathleen A LA 1/11/02 Laboratory Manager

Saved:ndata/typing/sops/metalsdigest rev030102.doc

DIGEST LOG

200.7 Total		3005A Total Recoverable for ICP		3020A Total by ICP-MS	
50 ml aliquot		50 ml aliquot		50 ml aliquot	
add 3 ml conc. HNO3		add 1.0 ml conc. HNO3 and		add 1.5 ml conc. HNO3	
cover - evap. to ~ 2-3 mls		2.5 ml conc. HCl		cover - evap. to ~ 3-5 mls	
cool - add 5 ml conc. HNO3		cover - evap. to approx. 10 mls		cool - add 1.5 ml conc. HNO3	
cover - evap. to ~ 2-3 mls		cool - dilute to 50 ml		cover - evap to ~ 3-5 mls	
cool - add 5 ml 1+1 HCL		**3010A Total for ICP**		cool - add ~ 10 ml DI H2O	
and 8 ml DI		50 ml sample		warm for 10-15 min.	
warm for 15 min.		add 1.5 ml conc. HNO3		cool - dilute to 50 ml	
cool - dilute to 50 ml		cover - evap. to 3-5 mls		**3031 Oils for ICP**	
200.7 Total Recoverable		cool - add 1.5 ml conc. HNO3		weigh 1.0 g into beaker	
50 ml aliquot		cover - evap. to 3-5 mls		add 1.0 g KMmO4 and mix well	
add 1 ml 1+1 HNO3 and		cool - add 5.0 ml 1+1 HCl		slowly add 2 ml conc. H2SO4, stir	
5 ml 1+1 HCl		warm for 15 min.		allow to react until no more fumes	
cover - evap. to ~ 10 mls		cool - dilute to 50 ml for ICP and As		cool - add 2 ml conc. HNO3, stir	
cool - dilute to 50 ml		or dilute to 5 mls for Se		allow to react until no more fumes	
200.8 Total Rec. by ICP-MS		**Arsenic in water by 7062**		cool - add 10 ml conc. HCL, stir	
50 ml aliquot		to the 25 ml 3010A digest		allow to react until no more fumes	
Add 1 ml (1+1) HNO3 and 0.5 ml (1+1) HCl		add 0.1 g L-cysteine		add DI H2O if foaming occurs	
Evap. to 10 ml		heat in water bath for 20 min.		cool - filter thru Whatman 41	
Gently reflux for 30 min.		**Selenium in water by 7742**		collect filtrate in beaker	
Cool – dilute to 50 ml		to the 5 ml 3010A digest		wash digest beaker and filter paper	
		20 ml conc. HCl		with 5 ml conc. HCL	
		heat in water bath for 30 min.		put filter paper into digest beaker	
		cool - dilute to 50 ml		add 5 ml conc. HCL, heat until	
				dissolved, filter and collect filtrate	
				heat filtrate to remove excess HCL	
				cool - dilute to 100 ml	

DIGEST LOG

3050B Soils by ICP/AA		CLP-A2 for ICP			
weigh 1.0 g into beaker		50 ml aliquot			
add 10 ml 1+1 HNO3, cover,		Add 1.0 ml (1+1) HNO3 and			
heat 10-15 min.		5.0 ml (1+1) HCl			
cool, add 5 ml conc HNO3,		Cover, heat 2 hr.			
cover, heat 30 min.		Cool, dilute to 50 ml			
repeat until no more brown fumes		**CLP-B1 Soil for ICP**			
evap to ~5 ml, or heat for 2 hrs		weigh 1.0 to 1.5 g into beaker			
cool, add 2 ml DI H2O and 3 ml		add 10 ml 1+1 HNO3			
H2O2, heat til efferves subsides		cover, heat for 10 min.			
continue adding 1 ml aliquots		cool, add 5 ml conc. HNO3			
H2O2 until efferves is minimal		cover, heat for 30 min.			
(no more than 10 ml H2O2 total)		cool, add 2 ml DIH2O and			
evap to ~5 ml, or heat for 2 hrs		3 ml 30% H2O2			
cool, add 10 ml conc. HCl		cover, heat till effervescence subsides			
warm for 15 min.		continue adding 1 ml aliquots			
cool, dilute to 100 mls		until efferves is minimal			
Arsenic in Soil by 7062		(no more than 10 ml total)			
25 ml of 3050B digest		cool, add 5 ml 1+1 HCl and			
add 0.1 g L-cysteine and		10 ml DI H2O, heat 10 min.			
0.5 g urea		cool, dilute to 100 mls			
heat in water bath for 20 min					
Selenium in Soil by 7742					
5 ml of 3050B digest					
Add 20 ml conc. HCl					
Heat in water bath for 30 min					
Cool, dilute to 50 ml (10X dil)					

TEST NOTES

METAL DIGESTION

Revision 06-0502

STANDARD OPERATING PROCEDURE
for
INDUCTIVELY COUPLED PLASMA ATOMIC EMISSION SPECTROMETRIC METHOD FOR TRACE ELEMENT ANALYSIS

EPA METHODS 200.7 [1,2,3]
SW-846 6010B [4]
CLP SOW 200.7 CLP-M [5]
NIOSH METHOD 7300 [6]

SCOPE AND APPLICATION:

This method may be used for the determination of dissolved or total elements in drinking water, surface water, groundwater, wastewater, TCLP extracts, soils, sludges, oils, solid waste, filter cassettes, and wipes. All matrices, except dissolved, require digestion prior to analysis. Table 1 lists the elements for which this method applies, along with the wavelength and practical quantitation limits.

Table 1

Element	Symbol	Wave Length (nm)	Practical Quantitation Limit, mg/l
Aluminum	Al	308.215	0.1
Antimony	Sb	231.147	0.05
Arsenic	As	193.759	0.1
Barium	Ba	455.404	0.05
Beryllium	Be	313.107	0.005
Boron	B	249.773	0.1
Cadmium	Cd	226.502	0.02
Calcium	Ca	317.933	1
Chromium	Cr	267.716	0.02
Cobalt	Co	228.615	0.02
Copper	Cu	324.754	0.02
Iron	Fe	259.940	0.05
Lead	Pb	220.351	0.05
Magnesium	Mg	279.079 ; 285.213	1
Manganese	Mn	257.610	0.02
Molybdenum	Mo	202.030	0.05
Nickel	Ni	231.604 ; 221.648	0.05
Potassium	K	766.490	1

Table 1 (cont.)

Element	Symbol	Wave Length (nm)	Practical Quantitation Limit, mg/l
Selenium	Se	196.090	0.1
Silicon	Si	251.611	1
Silver	Ag	328.068	0.05
Sodium	Na	589.592, 330.237	1
Thallium	Tl	190.864	0.1
Tin	Sn	189.980	0.04
Titanium	Ti	336.121	0.02
Vanadium	V	292.402	0.05
Zinc	Zn	213.856	0.02

SUMMARY OF METHOD:

Prior to analysis, samples must be solubilized or digested using the appropriate sample preparation method. When analyzing for dissolved constituents, acid digestion is not necessary if the samples are filtered and acid preserved prior to analysis.

This SOP describes the simultaneous, multi-elemental determination of elements by ICP. The method measures element-emitted light by optical spectrometry. Samples are nebulized and the resulting aerosol is transported to the plasma torch. Element-specific atomic-line emission spectra are produced by a radio frequency inductively coupled plasma. The spectra are dispersed by a grating spectrometer, and the intensities of the lines are monitored by pixels in CCD'S. Background correction is required for trace element determination. Background must be measured adjacent to analyte lines on samples during analysis. The position selected for the background-intensity measurement, on either or both sides of the analytical line, will be determined by the complexity of the spectrum adjacent to the analyte line. The position used must be free of spectra interference and reflect the same change in background intensity as occurs at the analyte wavelength measured.

INTERFERENCES:

Several types of interference effects may contribute to inaccuracies in the determination of trace elements. Please refer to the methods for a detailed summary on interference and methods for dealing with them.

SAMPLE HANDLING AND PRESERVATION:

1. Total or Total Recoverable Metals, Water: Collect 250 to 1000 mls of sample in a polyethylene or glass bottle. Preserve with 1+1 nitric acid (HNO_3) to a pH 2 or less. Normally, 8 mls of 1+1 HNO_3 per liter is sufficient.

2. Dissolved Metals, Water: The sample must be filtered through a 0.45 um membrane filter as soon as practical after collection. Preserve 250 to 1000 mls of the filtrate with 1+1 HNO_3 to a pH 2 or less.

3. Total metals in soil, solid waste: collect into one 4 - 9 oz. glass "soil" jar with teflon lid or a "Ziploc" bag.

4. Preserved samples have a six-month (180 day) holding time. Refrigerate the samples at 4° C upon receipt. Note: The various ICP methods contain differing instructions regarding refrigeration, some methods require the samples be maintained at 4° C, and others do not. Northern Analytical will maintain all metals samples at 4° C.

5. Dissolved metals may be analyzed without digestion. All other samples require an acid digestion prior to analysis. Refer to the Metals Digest SOP for detailed digestion instructions.

6. Drinking water samples may be analyzed without acid digestion if the sample turbidity is less than 1 NTU.

EQUIPMENT:

1. Inductively Coupled Plasma-Atomic Emission Spectrometer Spectro Cirros CCD

2. Computer and printer.

3. Radio frequency generator.

4. Argon gas supply.

5. Laboratory glassware, beakers, volumetric flasks, pipets.

6. Peristalic pump with orange/orange sample pump tubing and green/green waste pump tubing. Speed is at a default setting of 2.

7. Water circulator/cooler.

8. 100-1,000-ul Eppendorf automatic pipetter and 1.0-5.0 ml Oxford automatic pipetter.

9. Automatic pipetter tips

10. 50 ml Fisher brand (or any other suitable brand) plastic centrifuge tubes.

REAGENTS:

1. Acids, reagent grade, used in the preparation of samples and standards.
   a) Nitric acid (HNO_3)
   b) Hydrochloric acid (HCl)

2. Hydrogen Peroxide (H_2O_2) 30%

3. Deionized water, Millipore Q3, ASTM Type I.

4. "Omnisolv" water.

STANDARDS:

Record all standard preparations in the Standard Preparation log.

1. All standards, CCVs, and interference check samples are matrixed with acid to match the acid matrix of the sample. These are matrixed as follows:
   a) Dissolved metals - 1.0 mls HNO_3 per 100 mls Q3 DI water.
   b) Total/Total Recoverable Metals - 6 ml HNO_3 and 10 mls HCl per 100 mls Q3 DI water.

2. Calibration Standards (0–10mg/l)
   a) 10 mg/l standard - pipet 5.0 mls each of 100 mg/l CPI multi-element standards using the **calibrated** automatic pipetter, matrix and dilute to 50 mls with Q3 DI water in a centrifuge tube.
   b) 5 mg/l standard - pipet 2.5 mls each of 100 mg/l CPI multi-element standards, matrix and dilute to 50 mls.
   c) 1.0 mg/l standard - pipet 0.5 mls of 100 mg/l CPI multi-element standards, matrix and dilute to 50 mls.
   d) 0 mg/l blank - matrix 50 mls of Q3 DI water.

3. CPI Line Switch Calibration Standards (0-100 mg/l)
   a) 1000 mg/l standard – pipet 50 mls each of 10,000 mg/l CPI "A" and "B", matrix with 5% nitric acid and dilute to 500 mls.
   b) 100 mg/l standard – pipet 5 mls of the 1000 mg/l standard, matrix, and dilute to 50 mls.
   c) 50 mg/l standard – pipet 2.5 mls of the 1000 mg/l standard, matrix, and dilute to 50 mls.
   d) 20 mg/l standard – pipet 1.0 mls of the 1000 mg/l standard, matrix, and dilute to 50 mls.
   e) 10 mg/l standard – pipet 0.5 mls of the 1000 mg/l standard, matrix, and dilute to 50 mls.
   f) 5 mg/l standard – pipet 2.5 mls of the 100 mg/l standard, matrix, and dilute to 50 mls.
   g) 1 mg/l standard – pipet 0.5 mls of the 100 mg/l standard, matrix, and dilute to 50 mls.
   h) 0 mg/l blank - matrix 50 mls of Q3 DI water.

4. Calibration Verification Standards (ICV or CCV).
   Note: The ICV must be prepared from a source separate from the calibration standards.
   a) 4 mg/l ICV – pipet, using the **calibrated** automatic pipetter, 2.0 mls each of the 100 mg/l SCP Science multi-element stock, matrix, and dilute to 50 mls with Q3 DI water in a centrifuge tube.

b) 5 mg/l CCV – pipet, using the **calibrated** automatic pipetter, 2.5 mls each of the 100 mg/l CPI multi-element stock, matrix and dilute to 50 mls with Q3 DI water in a centrifuge tube.

c) 50 mg/l CCV – pipet, using the **calibrated** automatic pipetter, 2.5 mls of the 1000 mg/l CPI Line Switch standard, matrix and dilute to 50 mls with Q3 DI water in a centrifuge tube.

5. Interference Check Samples

a) Standard containing interfering elements -_The interference check sample contains 100 mg/l each of iron, aluminum, calcium, magnesium, and sodium and 3.0 mg/l of all the other metals. To prepare, pipet into a 50 ml centrifuge tube, 5.0 mls of the1000 mg/l CPI Line Switch standard, 1.5 mls each of 100 mg/l stock calibration standard (CPI), matrix and dilute to 50 mls with Q3 DI water.

b) Deionzed water containing interfering elements - The CLP SOW requires a second ICS consisting of a blank containing the interfering elements. Prepare as above but omit the CPI calibration standard.

5. ICP Reprofiling Solution

The reprofiling solution contains 10 mg/l each Fe, K, La, P, Sc, Ti; 5 mg/l Mg; and 50 mg/l S. To prepare, pipet into a 50 ml centrifuge tube, 5 mls of the CPI Northern Analytical ICP Reprofiling Solution, matrix with 1 ml HNO3 and 1 ml HCl, and dilute to 50 mls with Q3 DI water.

6. Torch Positioning Solution – 1.0 mg/l Mn

Prepare a 10 mg/l Mn solution, pipet into a 50 ml centrifuge tube, 0.5 mls of the Fisher brand 1000 mg/l Mn solution, matrix with 0.5 ml HNO3, and dilute to 50 mls with Q3 DI water. Prepare the 1.0 mg/l Mn solution, pipet 5 ml of the 10 mg/l solution into a 50 ml centrifuge tube, matrix and dilute to 50 mls.

7. UV/VIS Solution

The UV/VIS solution contains 10 mg/l Zn and Al. To prepare, pipet into a 50 ml centrifuge tube, 20 mls of the CPI multi-element standard, or 2.0 mls each of single element 1000 mg/l Al and Zn, matrix with 10 ml HNO3, and dilute to 250 mls with Q3 DI water. The same solution must be used for 1 full year, as the ratio of Al to Zn is most important.

PROCEDURE:

1. Computer Startup

Turn printer and computer on, if not already on. After Windows has loaded, the SmartAnalyzer software will automatically load. Type in the previously assigned log-in name and password when prompted. The main window will now appear.

2. Starting the IC Plasma

a) Turn on the valve for the ICP at the liquid argon tank (located in soil processing room) by turning the left hand side valve to the left. **DO NOT** touch the right side valve, as that is the argon flow source for the ICP-MS. The pressure gauge should read 140 psi.

b) Install new orange/orange sample pump tubing daily by hooking the orange tab on the top side of the pump and wrapping the tubing around the pump center of the second manifold looking towards the instrument, and hooking the other side of the pump tubing on the bottom side of the pump. The top side of the tubing should be connected to the sample probe tubing, and the bottom side of the tubing should be connected to the middle black connector on the instrument.

c) Install the green/green waste tubing weekly by hooking the green tab on the top side of the pump and wrapping the tubing around the pump center of the third manifold looking towards the instrument, and hooking the other side of the pump tubing on the bottom side of the pump. The top side of the tubing should be connected to the top blue connector on the instrument, and the bottom side of the tubing should be connected to the bottom blue connector on the instrument. Fold in both parts of the manifold.

d) The water chiller is consistently on. If shut down due to maintenance, turn on by pressing the I/O button.

e) Let the system flush by entering the system menu (icon is a folder with a plasma), dragging the bars associated with cooler, aux gas, and neb gas to about the middle with the mouse, and clicking "Apply". The system is pre-set to flush for 2 minutes.

f) To ignite the plasma, drag the bars associated with the flush back to 0 with the mouse and click on "Apply". Click on "Plasma" to start the 120-second ignition process. The plasma should ignite after the countdown. If not, refer to the Troubleshooting guide of this SOP or the troubleshooting guide of the Spectro software manual. If the ICP has been ignited that day already, and it was shut down for maintenance, the plasma can be ignited in a short starting process called "Quick Start". If this is the case, instead of clicking on the "Plasma" button, click on the "Quick Start" button.

g) Place the sample probe into the rinse water (either HNO3 or HNO3/HCl, depending on the matrix of the sample run) and turn on the pump by pressing the "Pump" button in the system menu. The speed is preset by the factory at a speed of 2. Allow the ICP to warm up for at least 30 minutes with the rinse water flush.

3. Reprofiling the ICP

a) Reprofiling the ICP can be done from any of the three main windows; "Main" (also known as "Command Editor"), "Method Development", and "Scan". These windows are defined as icons in the top toolbar as a folder with a graduation cap for "Method Development", a folder with a cog for "Scan" and a folder with a blue arrow pointing right for "Main". **DO NOT** click on the blue arrow icon when in the main window, as this is also used to start an autosampler run.

b) To find the reprofile optics menu, click on "System" in the upper toolbar (in any of the three windows) and click on "Reprofile Optics". Click "Yes" when prompted to run the reprofile now. Introduce the reprofiling solution, and let it flush for about 30 seconds. Click on the "Flush and Go" button in the reprofile optics window. The solution will flush for about 40 seconds, part fast, part slow speed on the peristaltic pump, and then will scan the optics. The % of the scan finished can be seen at the bottom of the screen. After the scan has

reached 100%, the reprofiling is done, and the sample probe can be returned to the rinse water. Reprofiling should be done daily.

4. Method Scans
   a) Scans must be performed to set peak position and background correction on all desired wavelengths.
   b) For already saved scans:
      1. Click on the cog icon on upper toolbar.
      2. Click on "File", "Load/New Scan".
      3. Click on the "Load Scans" tab.
      4. Click on the "File" button, select the desired scan file, and click on "OK".
      5. Select the standard in "Available samples" (only one standard should appear) by clicking on the standard to highlight it.
      6. Click on "Start" and the scan will load.
   c) For new scans:
      1. Follow steps 1 and 2 above.
      2. In "Measurement" tab, click on "Library" button and select the standard to be scanned in Sample name drop down list.
      3. Under "Available arrays" window, make sure all wavelength ranges are highlighted (if not, click on the Select button).
      4. Introduce the standard to be scanned, let it pump for about 30 seconds, then click on the "Start" button.
      5. The instrument will scan the standard and will load the scan.
   d) Scan Analysis:
      1. Click on the "Show Channel" icon, shown as a folder with a magnifying glass.
      2. Use wavelengths defined by method only.
      3. If the center of the peak is not defined correctly, click on "Operations", "Edit Channel", "Set Peak Pos" (if it's not already check-marked. Clicking on the line when it's been check-marked will undo the check-mark, thereby undoing the task.). Click on the center of the peak to define the highest point.
      4. If the background areas are not defined properly (shown by a light gray rectangle on either side of the peak), click on "Operations", "Edit Channel", "Set Background Pos" (if not already check-marked, as described above), and drag mouse to form a rectangle in the desired area of peak background to define the proper background area.
      5. To set the background correction, click on "Operations", "Edit Channel", "Background Correction", and the type of background desired (i.e.: "None", "Point Linear", "Square Linear"). Refer to the Spectro software manual or trainer for instructions on defining and using the different background types.
   e) Saving Scans:
      1. For an existing scan, click on "File", then "Save", which opens another window. Click on the "Select" button if all wavelengths are not highlighted, then click on "Save".
      2. For a new scan, click on "File", then "Save As", which opens another window. Type in the name of the new scan with ".asc" at the end, then

click "Ok". Click "Select" on the new window if all wavelengths are not highlighted, then click "Save".

3. **DO NOT CLOSE SCAN WINDOW**, or the background and peak corrections will not be saved. To go to the main window, click on its icon.

5. Method Development

a) For existing methods:

1. Click on the "Method Development" Icon, a folder with a graduation cap.
2. Click "File", "Load/New Method" if desired method is not already displayed.
3. Click on desired method to highlight it, then click "Ok".
4. If there are any specific notes or directions to be saved about the method, double click on "Edit notes" to bring up a notepad window. Type in any information needed, then click "File", "Save".
5. If any flush times need to be changed, double click on "Sample Introduction".
6. If a different nebulizer flow, auxiliary flow or torch position need to be entered, double click on "Instrument Parameters".
7. Default settings are used for "Measurement Parameters".
8. The format of the printed version of the sample information should not have to be changed.
9. The format of the printed and data file version of the sample analysis should not have to change.
10. If an element needs to be added to the method, click on its symbol in the periodic table located to the right of the dialogs. Double click on "Edit Line Selection" to choose the wavelength of the element added, or change an existing wavelength. Click on "Close". Save method by clicking "File", "Save".
11. Standards have already been defined. Refer to the Spectro software manual or the trainer for detailed information on adding or changing standards.
12. For manual method, double click on "Measure Standards". If autosampler is to be used, do not click on this dialog.
13. Double click on the "Edit Regression Data" dialog if manual correlation was used. If autosampler is to be used, do not click on this dialog. This will be explained more in the Command List section of this SOP.
14. Double click on the "Interference Factors" dialog to check that IEC's have been entered properly. Click "Ok". IEC's are covered in the Interference section of this SOP.

b) For new method:

1. Follow steps 1 and 2 from existing method.
2. Click on "New" button. Type in desired method name and method author. Click "Ok".
3. Follow steps 4-8 from existing method.

4. Double click on "Define Output Format" dialog. The analysis output to both the computer and data file can be revised here. Select the "single" and "average + RSD" boxes for the printer and "average" box for data file. Click on the "Data File" button and deselect the "ASCII delimited format" box in the "Channel data file extension" dialog. Click "Ok".
5. Select elements to be used for the new method by clicking on the "Analytical line" dialog under the periodic table then clicking on the elements to be used in the method on the periodic table. Click on the "Monitor line" dialog under the periodic table to define the monitoring element, usually Argon, and click on the "Ar" box in the periodic table. If internal standards are to be used, click on the "Reference line" dialog under the periodic table, then click on the elements to be used as internal standards on the periodic table.
6. Follow step 10 from existing methods to define wavelengths associated with the elements selected for the new method. Refer to the software manual or trainer for a more detailed explanation of line selection and line switching (if needed). Click "Ok".
7. Click "File", "Save" to save the method.
8. Follow steps 11-13 from existing methods.
9. IEC calculations and entering into the software will be explained in the Interference section of this SOP.
10. Click "File", "Save" to save the method.
11. **DO NOT CLOSE METHOD DEVELOPMENT WINDOW FOR ANY REASON.** To return to the main window, click on its icon.

6. Command List Editor

This menu is also referred to as the main window. Any menu can be accessed from here. Autosampler analysis is set up in this window.

a) Automatic run setup:

1. Click on "File", "New".
2. The "Select an Existing Tray File" window opens. From the drop down menu under Autosampler Tray, select C:\Spectro\Auto\Sample.TRY. Click the "Ok" button.
3. Click "Cmd-Editor", "Method"
4. Under the "Method" tab, select desired method from left window. Filter is "All Elements". Position of method rinse is "rinse". Click "All Methods" unless standard additions are to be used, then click "Only Std.Add". Click the "Insert" button.
5. Under the "Analyt.Std." tab, select the position of the first standard (2/01) from the dropdown menu of the Tray Position dialog. Select the type of standard to be used (calibration standard) from the dropdown menu of the Standard Type dialog. Select the standard name of the first standard (0 ppm std) from the dropdown menu of the Standard Name dialog. Click the "Insert" button. The tray position will automatically go to the next position (e.g. 2/02) after "Insert" is clicked. For the next 3 standards, only the standard name needs to be changed, and "Insert" must be clicked after every standard.

The standards are set up as follows:

2/01 = 0 ppm std
2/02 = 1.0 ppm std
2/03 = 5.0 ppm std
2/04 = 10 ppm std

6. Once all the standards have been added to the command list, click the "Regression" tab. Select the channel to be regressed (usually "All Lines" is selected), by clicking on it to highlight it. For Standard additions, the mode needs to be "with Std. Add.", Otherwise, leave the mode "Manual". Click "Insert". Click "Close".
7. Click "Cmd-Editor", "Sample".
8. Under the "Analyt.Std." Tab, select position 2/05 from the drop down menu of the Tray Position dialog. Select "Control Sample" from the drop down menu of the Standard Type dialog. Select "4.0 ppm ICV" from the drop down menu of the "Standard Name" dialog. Click "Insert". Repeat this step for all initial QC requirements. The tray position and standard names are as follows:

   2/06 = 5.0 ppm CCV
   2/01 = 0 ppm CCB
   2/04 = 10 ppm HISTD
   2/07 = 3.0 ppm ICSAB

   where HISTD is the high standard check and ICSAB is the interference check sample.
9. After the Interference check sample, a rinse is recommended. Click on the "Rinse" tab, change the Tray position to "Rinse" with the drop down menu, and type in the rinse time desired (default is 300 sec). Click "Insert".
10. Click on the "Sample" tab. Select the tray position to begin the analysis of samples, which is usually 2/08. Type in the Batch ID in the following manner: month day year-run #, eg. 020602-1, meaning the first run of Feb. 6, 2002. Type in the Sample ID in the "Sample ID" window. Descriptions of the sample, including client, digest batch and date of digestion can be typed in the "Description" window. If any dilutions of samples are incorporated, fill in the "Aliquot Volume" and "Diluted Volume" windows (e.g. a 10 times dilution would be 1 for the aliquot volume and 10 for the diluted volume). For soils with no dilution, the final volume (e.g. 100 mls) will be filled in under "Aliquot Volume", and the weight will be filled in under "Sample Weight". If a dilution of a soil is necessary, multiply the aliquot volume and the dilution factor (e.g. a 5 times dilution of a soil would be 100x5=500) and type it in under "Aliquot Volume". After each sample is filled in, click "Insert".
11. After every 10 samples, a CCV/CCB must be run. See step 8 to insert these QC samples. The tray position, after addition of the CCV and CCB will revert to the next tray position after the position of the CCB. Make sure the next sample is inserted into the right tray position.
12. At the end of the run, a CCV, CCB, and ICSAB must be run due to method specifications. See step 8 to insert these QC samples. Set up a rinse following the ICSAB by following step 9.

13. To end the autosampler run, click "Cmd-Editor", "Commands", "End Command". To shut down the ICP after the run is finished, click on "Cmd-Editor", "Commands", "Pump Off", "Cmd-Editor", "Commands", "Plasma Off", "Cmd-Editor", "Commands", "End Command".
14. Save the command list by clicking "File", "Save as". Change the drive to the D drive in the drop down menu under the "Drives" dialog. Type in the batch name of the command list, followed by ".cmd", e.g. 020602-1.cmd. Click "Ok".
15. Print the command list by clicking on the icon in the top toolbar specified by a folder and printer.
16. To begin the autosampler run, click on the icon in the top toolbar specified by a folder and blue arrow pointing right. The command list will shrink to a small box located in the bottom right corner of the computer screen. The measure window will fill the whole computer screen. To stop the run, click on the icon specified by a folder with a blue circle located in the small command list window. Clicking the icon again will restore the command list to full computer screen size, and will allow the analyst to edit any samples and choose a different tray position to start from.

7. Standard Regression
   a) After the command editor has run the defined standards, it will perform a regression calculation and DL calculation. The command list will stop running after the 10 ppm standard, and will return to the full computer screen size. Click on the "Method Development" icon in the top toolbar. Double click the "Edit Regression Data" dialog. Each element's regression line can now be looked at and edited. Some elements, such as Na and K, are not linear, but cubic in nature. Make sure the right type of line (linear, quadratic or cubic) has been calculated for each element by clicking on "Operations", "Model", and choosing the right line form from the drop down window. The line must then be recalculated. Click on "Operations", "Calculate". The regression line, correlation coefficient, BEC, DL, x-and y-intercepts will then be changed by the calculation.
   b) Interference corrections (IEC's) are also entered in the regression dialog.

8. IEC calculations:
   a) IEC's for aluminum and iron should be run monthly, as they tend to change depending on neb flow and torch position. All other IEC's should be run semi-annually.
   b) IEC's are analyzed like a normal sample, omitting QC. Rinse in between samples.
   c) Calculate IEC's by dividing interfered element by interfering element. Values will be <1.
   d) Stop the run after the IEC is calculated. Click on the "Method Development" icon. Double click on "Edit Regression Data".
   e) Select the element being interfered with from the list on the right hand side, then click "Operations", "Interference".

f) From the drop down list, select the interferer, select "+" from "Type" drop down list, and check both "Lock" and "Active" by clicking on the box next to them.

g) Linear factor is determined in Int. per conc. unit instead of in Conc. per conc. unit, so guesswork is used here. Start with 100, click on "Insert", then click on "conc. per conc. unit" under "Display" mode to check how close the number is to the IEC. Select "Int. per conc. unit" under "Display" mode to change back, and change the number typed in to get as close to the IEC as possible by double clicking on highlighted line, and saving the number once it's changed by clicking on "Save". Repeat this process until the IEC value is as close to the calculated IEC as possible. Once this is finished, click on "OK", then click "Operations", and "Calculate" to incorporate the IEC factor in the regression line. Repeat with each interfered element.

h) When finished, click on "File", "Accept", "Select", "Ok", "Ok". Click "File", "Save" in Method Development window.

i) Rerun the interfering element with IEC's incorporated to determine if the IEC's are correct. If they are correct, rinse and run the next interferer. If not correct, stop the run, return to the edit regression page, select the incorrect interfered element, click on "operations", "interference", and deselect the active box by clicking on it. Click "save", "operations", "calculate", "file", "accept", "select", "ok", "ok", and click "file", "save" in the methods development window. Rerun the interfering element, stop the run, and proceed as above.

9. Maintenance: **Note: All maintenance should be recorded in the ICP Maintenance Log and the ICP Run Log.**

a) Daily Maintenance:
   1. Make sure sample tubing is changed (orange-orange)
   2. Check chiller water level, and replenish as needed with either DI or tap water.
   3. Empty the waste receptacle.
   4. Clean sample probe and tubing with wire.
   5. Rinse beaker used for rinse water and replenish with the rinse water pertaining to the matrix of the samples to be run that day.
   6. Flush the system as described above.
   7. Reprofile the optics as described above.

b) Weekly Maintenance:
   1. Check and fill argon humidifier to half full if empty.
   2. Clean nebulizer, torch, and interface.
   3. Remove nebulizer from the spray chamber by first disconnecting spray chamber and torch, disconnecting argon line from nebulizer, disconnecting sample line from nebulizer, and gently pulling nebulizer off the spray chamber by rocking it back and forth. Clean nebulizer by disconnecting argon tubing from the nebulizer by turning in a counter-clockwise direction, and placing nebulizer in a dilute aqua-regia (HNO3 + HCl) solution and letting it soak for about 15 minutes. Rinse nebulizer with DI water, and wipe dry with a Kim-Wipe. Clean the sample input connector with a thin

wire. Replace nebulizer in the opposite manner as described above.

4. Remove the torch by unscrewing the hold, making sure the spray chamber is still disconnected, and sliding the torch out. Disconnect the argon lines. Clean the torch by inserting it upside down in a solution of either dilute HNO3, aqua-regia, or sulfuric acid mixed with No-Chromix, depending on the cleanliness, and soaking for about 15 minutes. Rinse thoroughly with DI water, and either let air dry, or, using acetone, spray the inside of the torch and dry with compressed air. Replace torch in the opposite manner as described above.
5. Remove interface by unscrewing the hold, and pulling it out while pushing on the metal frame to make it larger and therefore easier to slide the interface out. Make sure the torch is either disconnected and pushed away from the interface, or out of its holder. Clean the interface, by unscrewing the parts using the tool provided by Spectro, taking it apart, and cleaning in the following manner: Clean the part facing the plasma with a toothbrush and plain toothpaste (a mild abrasive) to remove any burnt on material. On the other side of the interface, take out the plastic window and clean with a Kim-Wipe. Replace the parts, and replace the interface in the opposite manner as described above. Note: To insure the interface is put back in straight, make sure that when the holding is turned to screw back in the interface, it turns smoothly and loosely.
6. Clean ICP with a wet paper towel or rag on all sides, top, front, and inside and outside sample introduction system windows.
7. Change waste tubing (green-green).
8. Position the torch for optimum intensity as follows:
   - Flush system and ignite plasma, letting system warm for about 1 hour.
   - Click on the "plasma" icon in the upper toolbar in any of the main windows.
   - Click on the "Torch Position" tab.
   - Select the wavelength to be used by clicking on the drop down menu under "Channel (nm)". Select the wavelength by highlighting it (Mn 257.610 is normally used), and flush a 1 ppm Mn solution through the system.
   - Set both horizontal and vertical positions to 0 by clicking on either the "+" or "-" buttons on either side of the value. Always leave the distance at 5 mm.
   - Click on the "Apply" button. The torch box will move to the (0,0) position and scan the selected wavelength. Results are generated in cps (counts per second) in the "Results" window.
   - Add or subtract mm distance for the horizontal first by using the "+" or "-" buttons, clicking on "Apply", and regenerating cps results. Keep moving the horizontal until the highest cps intensity is found, which will be shown in green in the "Results" window.
   - Repeat the steps for the vertical movement. Best result is usually shown in red with a green highlight in the "Results"

window, otherwise the highest cps is used. Click on "Store Pos." when optimized, then "Close" to close out the window.

9. Calculate IEC's for aluminum and iron.

c) Monthly Maintenance:

1. Check and clean all filters (found on side and back of instrument) when needed.
2. UV-VIS check performed as follows:
   - The UV-VIS check is performed every 30 days. The instrument is set up to remind the analyst of when it is to be run.
   - When the reminder window is up, select "Ok", and flush the system with the 10 ppm UV-VIS solution. The method is set up with only Al 167 and Zn 213 as monitor elements. This solution must be the same for at least a year, since the ratios are what is calculated to determine if the UV-argon cartridge is to be replaced. Click on "OK" when the sample has flushed through. A pre-flush will be run, and the sample will be measured only once. If the ratio is Ok, a window will say it is. If the ratio falls below 0.5, the cartridge needs to be replaced. Cartridges are ordered only through Spectro, and can be changed by the analyst. The cartridge lasts approximately 1 year.

d) Yearly Maintenance:
Change UV-argon cartridge as needed (explained above).

e) Troubleshooting
Note: All maintenance should be recorded in the ICP Maintenance Log and the ICP Run Log.
See attached pages for troubleshooting.

CALCULATIONS:

1. The computer will calculate the concentration of the sample into mg/l for you. When reporting in other units besides mg/l, use the following calculations.

ug/ml = mg/liter

ug/l = mg/l x 1000

$$\text{mg/kg} = \text{mg/l} \times \frac{\text{mls sample}}{\text{grams}} \times \frac{1000\ \text{gms}}{1\ \text{kg}} \times \frac{1\ \text{liter}}{1000\ \text{ml}}$$

ug/gm = mg/kg

ug/wipe = mg/l x 1000 x final digest volume in liters

2. Be sure to account for all dilutions when calculating the final concentration.

3. All calculations must be checked by a second analyst.

4. Calculate spike recovery – Water and Soil

$$\frac{\text{Spiked sample result} - \text{Sample result}}{\text{Spike added}} \times 100$$

$$\text{Where the Spike added} = \frac{(\text{Spike solu. conc.}) \times (\text{mls of spike added})}{\text{mls or grams of sample}}$$

QUALITY CONTROL:

1. Verify the correctness of the calibration standards and that the instrument is properly calibrated by analyzing an initial calibration verification check standard (ICV). The ICV is also known in the 200.7 SDWA method as a Quality Control Sample (QCS). The ICV/QCS is prepared from a source separate from the calibration standards. The ICV/QCS acceptance limits are:
   - -Method 200.7, 95 – 105%
   - -Method 6010B, 90 – 110%
   - -Method 200.7 CLP-M, 90 – 110%
   - -Method 7300, 90 – 110%

   If the ICV/QCS is outside these limits then:
   - -Reanalyze the ICV/QCS or,
   - -Reprep and reanalyze the ICV/QCS or,
   - -Recalibrate or,
   - -Reprep calibration standards and recalibrate.

2. Verify the calibration after every 10 samples by analyzing a continuing calibration verification check standard (CCV). This standard is known as an instrument performance check standard (IPC) in the 200.7 SDWA method. The CCV/IPC acceptance limits are:
   - -Method 200.7, 95 – 105%
   - -Method 6010B, 90 – 110%
   - -Method 200.7 CLP-M, 90 – 110%
   - -Method 7300, 90 – 110%

   If the CCV/IPC is outside these limits then reanalyze all the samples since the last acceptable CCV/IPC.

3. Analyze a calibration blank (CB) after the ICV/QCS and after every CCV/IPC. The calibration blank acceptance limits are:
   - -Method 200.7, less than the reporting limit or less than 1/10 of the sample analyte concentrations, whichever is greater.
   - -Method 200.7 SDWA, less than 2.2 times the MDL or less than 1/10 of the sample analyte concentrations, whichever is greater.
   - -Method 6010B, less than 3 times the MDL or less than 1/10 of the sample analyte concentrations, whichever is greater.
   - -Method 200.7 CLP-M, less than the reporting limit or less than 1/10 of the sample analyte concentrations, whichever is greater.
   - -Method 7300, less than the reporting limit or less than 1/10 of the sample analyte concentrations, whichever is greater.

If the CB is outside these limits, reanalyze all samples since the last acceptable CB. Do not blank subtract.

4. Reanalyze the highest standard (e.g. 10.0 ppm) at the beginning of the run. According to Methods 200.7 and 6010, the result must be within 5% of the true value. If the recovery is not within these limits then recalibrate.

5. For method 200.7 CLP-M, analyze a reporting limit standard at two times the RL at the beginning and end of the run. The RL acceptance limits are 70 – 130%. If the RL standard is outside these limits, rerun all affected samples.

6. Analyze an interference check sample (ICS) at the beginning and end of each run. The ICS acceptance limits are 80 – 120 % of its true value. For method 200.7 CLP-M also run the ICS-A standard (blank with interfering elements). The ICS-A acceptance limits are less than the reporting limit. If the ICS standards are outside these limits, reanalyze all affected samples.

7. All sample digest or analytical batches must contain a laboratory reagent blank (LRB) also known as a digest blank or preparation blank. The LRB is taken through the entire digestion and analytical processes. The LRB acceptance limits are the same as for the CBs in 3 above. If the LRB is outside these limits, redigest and reanalyze all affected samples. Note: Digest or analytical batches are 20 samples or less, not including QC samples.

8. All sample digest or analytical batches must contain a laboratory fortified blank (LFB) also known as a blank spike or laboratory control sample (LCS). The LFB/LCS is taken through the entire digestion and analytical processes. The LFB/LCS acceptance limits are given in Northern's "Quality Control Acceptance Criteria". If the LFB/LCS is outside these limits, redigest and reanalyze all affected samples. Do not blank subtract. Note: Digest or analytical batches are 20 samples or less, not including QC samples.

9. A matrix spike (MS), also known as a laboratory fortified matrix (LFM) is to be performed with every batch on 5 to 10 percent of the samples. The frequency is as follows:

   -Method 200.7, 10% (1 in every 10 samples, minimum of one per batch)
   -Method 6010B, 5% (1 in every 20 samples, minimum of one per batch)
   -Method 200.7 CLP-M, 5% (1 in every 20 samples, minimum of one per batch)
   -Method 7300, not applicable

   The MS is prepared at the same concentration and from the same spiking solution as the LFB. The MS is taken through the entire digestion and analytical processes. Calculate the MS recovery as follows:

$$\% R = \frac{\text{spiked sample result} - \text{sample result}}{\text{spike added}} \times 100$$

   The MS acceptance limits are given in Northern's "Quality Control Acceptance Criteria". If the MS recovery is not within these limits and the LFB was acceptable, then matrix interference is suspected and the sample result(s) are flagged as estimated. If the sample result was more than four times the spike added, then the spike is not

valid and the results are reported unflagged.

10. A laboratory duplicate or a matrix spike duplicate (MSD) is to be performed with every batch on 5 to 10 percent of the samples. The frequency is as follows:
    -Method 200.7, Duplicate at 10% for SDWA samples (1 in every 10 samples, minimum of one per batch) or MSD for other 200.7 samples.
    -Method 6010B, MSD at 5% (1 in every 20 samples, minimum of one per batch)
    -Method 200.7 CLP-M, Duplicate at 5% (1 in every 20 samples, minimum of one per batch)
    -Method 7300, not applicable

    The duplicate or MSD is taken through the entire digestion and analytical processes. Calculate the relative percent difference between the sample and the laboratory duplicate or the MS and MSD as follows:

    $$RPD = \frac{\text{Sample result} - \text{duplicate result}}{((\text{sample result} + \text{duplicate result})/2)} \times 100$$

    The duplicate and MSD acceptance limits are given in Northern's "Quality Control Acceptance Criteria". If the duplicate or MSD recovery is not within these limits and the LFB was acceptable, then matrix interference is suspected and the sample result(s) are flagged as estimated.

11. If the analyte concentration is sufficiently high (minimally, a factor of 50 above the instrument detection limit in the original solution but <90% of the linear limit), an analysis of a 1+4 dilution should agree (after correction for the fivefold dilution) within +/- 10% of the original determination. The percent difference is calculated as follows:

    $$\%D = \frac{(\text{original sample result} - \text{diluted sample result})}{\text{original sample result}} \times 100$$

    If the dilution test is not within +/- 10%, a chemical or physical interference effect should be suspected and the associated data sample results should be flagged as estimated.

12. MDLs must be determined for all wavelengths utilized, using reagent water (blank) fortified at a concentration of 2-5 times the estimated instrument detection limit. To determine MDL values, take 7-10 replicate aliquots of the fortified reagent blank and process through the entire analytical method. Perform all calculations defined in the method and report the concentration values in the appropriate units. MDLs should be determined annually, by each new analyst, or when a change in analytical performance caused by either a change in instrument hardware or operating conditions would dictate they be redetermined.

13. A linear dynamic range study (LDR) must be performed annually by analyzing succeedingly higher standard concentrations of the analytes until the observed analyte concentration is no more than 10% below the standard concentration.

REFERENCES:

1. Code of Federal Regulations, 40 CFR Part 136 Method 200.7, July 1999.

2. EPA 600/4-79-020 *"Methods for Chemical Analysis of Water and Wastes"*, Method 200.7, December 1982.

3. EPA/600/4-94-111 *"Methods for the Determination of Metals in Environmental Samples"* Supplement 1, Method 200.7, Version 4.4, May 1994.

4. SW-846 *"Test Methods for Evaluating Solid Waste"*, Method 6010B, Dec. 1996.

5. USEPA Contract Laboratory Program Statement of Work for Inorganic Analysis, Multi-Media, Multi-Concentration, IMLO4.0

6. *"NIOSH Manual of Analytical Methods"*, Fourth Edition, Method 7300, Elements ICP, Aug. 1994.

Reviewed by:

5/29/02 Analyst

6/27/02 Analyst

5-24-02 Quality Assurance Coordinator

6/28/02 Laboratory Manager

Saved: ndata/typing/sops/ICPmetal200.7 rev06-0502.doc

ICP METALS

TEST NOTES

ICP METALS

TEST NOTES

ICP MAINTENANCE LOG

DAILY MAINTENANCE

Mark boxes with an "X" when completed.

1. Change orange-orange tubing. ☐
2. Check chiller water level. Replenish as necessary. ☐
3. Empty waste receptacle. ☐
4. Clean sample probe and tubing. ☐
5. Replenish rinse water. ☐
6. Flush system. ☐
7. Reprofile optics. ☐

WEEKLY MAINTENANCE

Mark boxes with an "X" when completed.

1. Check and fill argon humidifier to half-full. ☐
2. Clean nebulizer, torch, and interface. ☐
3. Clean ICP-top, sides, front, inside sample intro. system windows ☐
4. Change green-green tubing. ☐
5. Torch positioning. a. Horizontal= _____ ☐
   b. Vertical= _____
6. Calculate IEC's ☐

MONTHLY MAINTENANCE

Mark boxes with an "X" when completed.

1. Check and clean filters. ☐
2. UV-VIS check. ☐

YEARLY MAINTENANCE

Mark boxes with an "X" when completed.

1. Change argon filter. ☐

DATE: _____

INITIALS: _____

METHODS: _____

SAMPLES: _____

N|typing|forms|icp maintenance log.xls

15.4 Trouble-Shooting

This section is intended as a quick self-help for problems that the operator can easily solve. If the error source cannot be solved, please describe the fault carefully and contact the SPECTRO service.

Software Error Messages

Some errors are recognized by the software. After an error occured, a dialog containing an error message is shown. In addition to the message, a number is displayed on the right side. Add error message and number to your description of the fault.

Self-Help Compendium

Generator

Error	Possible cause	Possible Solution
Generator does not start	- power supply	- check instrument power supply (fuses, main switch)
Error message: No argon on main valve	- argon supply interrupted	- check argon supply - check argon inlet pressure (should be >6 bar)
Error message: No cooling water	- water supply interrupted	- check to ensure system (lubing, etc.) is not blocked (dirt, lime deposits) - check flow amount
	- water inlet pressure too low	- increase inlet pressure (ca. 4 bar/60 PSI)
Error message: Generator door open	- door incorrectly closed	- check closing mechanism
Error message: Current error on start	- error during start routine	- repeat start procedure
Torch melts	- torch incorrectly adjusted within the induction coil	- check that it is centered
	- aerosol tube blocked	- take out and clean
	- leak in the argon connection to the torch	- search for leak with soapy solution and seal

	- Auxiliary gas flow set too low	- increase flow rate
	- leak in the nebulizer system	- search for leak with soapy solution and seal
Plasma cannot be lit	- no Tesla spark	- spark plug/ cable not connected to the quick-snap connection from the argon inlet for the Coolant gas - ignition cable not connected with the ignition coil
	- torch not correctly centered within the coil	- check adjustment
	- oxygen in the sample introduction system	- Flush the sample introduction system with argon
	- wrong argon quality	- welding argon with a quality of 4.6 is required (purity 99.996%)
Plasma asymmetrical	- aerosol tube incorrectly adjusted	- center aerosol tube
	- argon flush of light tube to opic to high	- reduce exhaust rate
	- exhaust rate set too high	- reduce exhaust flow
Plasma flickers or pulsates	- humidity or deposits in the aerosol tube	- clean and dry aerosol tube or replace it
	-	
	-aerosol pulsates (deposits in nebulizer)	- clean nebulizer - replace pump tube
Plasma too bright	- power set too high	- decrease power
	- leak in torch (demountable)	- check O-rings
	-oxygen in sample introduction system	- check for and repair leaks

Plasma extinguished when nebulizer gas is turned on	- aerosol tube is not centered in the torch (demountable)	- adjust aerosol tube
	- sample feed tubing has been disconnected from nebulizer	- attach again and check fitting
	- oxygen in sample introduction system	- before starting again, flush the system with argon
	- there is a leak in the sample introduction system	- search for and repair leak
No *channel* can be seen in the plasma	- aerosol tube is not correctly centered (demountable torch)	- adjust aerosol tube
	- nebulizer flow rate is set too low	- optimize nebulizer flow rate again
	- leakage in the torch (demountable)	- check O-rings in torch and quick snap connections for argon inlet tubing - lightly apply vacuum grease to the ground ball joint on the torch - check the clamp between the torch and the spray chamber
	- nebulizer blocked	- take out and clean nebulizer
	- leakage in drain	- search for and repair leak
Nebulizer frequently blocked	- no water in argon humidifier	- half fill argon humidifier with distilled water
Error message: Waste container full	- waste container is full	- remove the cover of container in instrument door and suitably dispose of discharge
Sparking-over at the coil	- humidity	- turn off generator and dry coil with tissue paper (if

		humidity is visible)
	- dirt on the coil	- clean coil with toothbrush
	- torch is not in the center of the coil	- center torch within the coil again

Spectrometer and Computer

Error	Possible Cause	Possible Solution
Monitor screen remains dark	- brightness control turned down	- check control knob
	- computer not turned on	- turn on with main switch
Error message: Peak drift detected	- wrong reprofiling solution - large peak drift detected	- check reprofiling solution - inform SPECTRO service
Error message: No peak for drift detected	- wrong reprofiling solution	- check reprofiling solution
Intensities are too low	- measurements are not made at peak maximum	- check reprofiling
	- nebulizer blocked	- take out and clean nebulizer
Poor reproducibility	- samples are not homogeneous	- check reproducibility using other samples
	- plasma pulsates or flickers	- check for and repair leaks in the torch/sample introduction system
Poor reproducibility for one element	nebulizer flow rate too high/low	- clean nebulizer - check for and repair leak
Error message: Unknown address	- device not found	- check connection to DIN-meaurement-bus or host card - check power supply
Error message: No answer from readout system	- device does not answer	- check connection to DIN-meaurement-bus or host card
Faulty standardization	- elements in the standardization solution	- repeat standardization with fresh solutions

have precipitated	
- intensities for high or low samples have changed for single elements	- repeat standardization - check to see which elements have changed (which lines are affected) - Contamination of sample introduction system - Contamination of blank - inform SPECTRO service

STANDARD OPERATING PROCEDURE FOR EPA METHOD 200.8 USING THE ELAN 6100 ICP-MS

Table of Contents

1.0 Scope and Application
2.0 Summary of Method
3.0 Interferences
4.0 Safety
5.0 Equipment and Supplies
6.0 Reagents and Standards
7.0 Sample Preservation, Collection, and Storage
8.0 Quality Control
9.0 Calibration and Standardization
10.0 Procedure
11.0 Data Analysis and Calculations
12.0 Method Performance
13.0 Troubleshooting
14.0 Appendices
15.0 References

1.0 Scope and Application

1.1 This Standard Operating Procedure describes the daily operation, tuning, optimization, and analysis procedures for the analysis of samples according to U.S. EPA Method 200.8[1] for the elements listed in Appendix I using the ELAN 6100 ICP-MS.

1.2 This method is applicable to the following sample matrices: ground waters, surface waters, drinking waters, wastewaters, solid wastes, and soil samples.

1.3 For the determination of metals in water samples with a turbidity values greater than 1 NTU, the appropriate sample digestion method must be followed prior to sample analysis.

1.4 Routine operation and maintenance procedures for the ELAN 6100 ICP-MS may be found in the ELAN Hardware Manual[2] provided by the instrument manufacturer.

1.5 Detailed instructions on operating of the ELAN 6100 ICP-MS operating software may be found in the ELAN 6000 Software Manual[3].

1.6 Detailed information regarding requirements by U.S. EPA Method 200.8 may be found in version 5.4 of Method 200.8[1].

1.7 This SOP is designed for use with the Method 200.8 for ELAN 6100 method disk

[1] "Methods for the Determination of Metals in Environmental Samples- Supplement 1", EPA-600/R-94-111, May 1994, Available at NTIS, PB 94-184942.
[2] ELAN 6000 Hardware Manual, 1995, Perkin-Elmer Corporation.
[3] ELAN 6000 ICP-MS Software Manual, 1995, Perkin-Elmer Corporation.

2.0 Summary of Method

2.1 Aqueous sample, digestates, leachates, etc. are nebulized into a spray chamber where a stream of argon carries the sample aerosol through a quartz torch and injects it into a R.F. plasma. There the sample is decomposed and desolvated. The ions produced are entrained in the plasma gas and by means of a watercooled, differentially pumped interface, introduced into a high-vacuum chamber that house a quadrupole mass spectrometer. The ions are sorted according to their mass-to-charge ratio and measured with a detector.

3.0 Interferences

3.1 Isobaric Interferences occur when an isotope of one element is at the same nominal mass as an isotope of another element (e.g., Mo 98 and Ru 98). Corrections for isobaric interferences may be made by measuring the intensity due to the interfering element at another isotope and using its natural abundance ratios to correct for its presence at the analytical mass of interest. Most commonly used corrections for isobaric interferences are already present as default interference equations in the ELAN NT software.

3.1.1 Care should be taken that the isotope measured for correction purposes does not suffer from overlap with other isotopes that may be present in the sample.

3.2 Molecular interferences are caused by molecular species formed in the plasma with plasma or matrix ions (examples of common molecular interferences include ArCl, ClO, Nitrogen dimer, oxygen dimer, oxide species, double charged species, etc.) Predictions about the type of molecular interferences may be made using knowledge about the sample matrix. Molecular interferences can often be corrected for in the same manner as isobaric interferences, i.e., measuring the intensity present at another isotope and using isotope ratios to calculate the amount of the interfering species. For example, corrections for interferences of$Ar^{40}Cl^{35}$ on As at mass 75 may be made by measuring the intensity of ArCl present at mass 77 ($Ar^{40}Cl^{37}$) and converting to the apparent intensity of ArCl at mass 75 by using the isotopic ratio of Cl^{37} to Cl^{35}. Method 200.8 requires the use of several such corrections, which are present in the ELAN NT 200.8 Method. A list of the corrections used is given in the listing of the isotopes monitored in the ELAN NT 200.8 method in Appendix I.

4.0 Safety

4.1 The use of laboratory equipment and chemicals exposes the analyst to several potential hazards. Good laboratory technique and safety practices should be followed at all times.

4.2 Safety glasses should be worn at all times when handling samples, reagents, or when in the vicinity of others handling these items.

4.3 Liquid argon represents a potential cryogenic hazard and safe handling procedures should be used at all times when handling liquid argon tanks.

4.4 The ELAN 6100 is fully interlocked to protect the user from dangers such as high voltages, radio frequency generators, and intense ultra-violet light. At no time should the operator attempt to disable these interlocks or operate the ELAN 6100 if any safety interlock is known to be disabled or malfunctioning.

4.5 Spilled samples, reagents, and water should be cleaned up from instrument and auto sampler surfaces immediately. In the case of acid spills the acid should be neutralized with sodium bicarbonate solution before cleanup.

4.6 All additional company safety practices should be followed at all times.

5.0 Equipment and Supplies

5.1 Perkin-Elmer ELAN 6100 ICP-MS system.

5.1.1 Includes ELAN 6100 instrument, computer system, ELAN NTsoftware, printer, and auto sampler.

5.2 Peristaltic pump tubing:

5.2.1 Black/Black - 0.75 mm i.d. (for sample introduction).
5.2.2 Yellow/Orange - 0.51 mm i.d. (for internal standard introduction).
5.2.3 Purple/White - 2.79 mm i.d. (for drain).
5.2.4 Red/Red - 1.14 mm i.d. (for rinse station).
5.2.5 Blue/Blue - 1.65 mm i.d. (for making connections).
5.2.6 Purple/Purple -2.06 mm i.d. (for making connections).

5.3 T-connector, polypropylene, 1/16 inch i.d. (PE Part # B019-8201; Cole Parmer Part Number: H-06365-77) for hooking up on-line addition of internal standards.

5.4 Calibrated mechanical pipettes.

5.4.1 10-100 µL.
5.4.2 100 - 1000 µL.
5.4.3 1000 - 5000 µL.

5.5 Metal-free plastic pipette tips (for the pipettes specified in 5.4).

5.6 15-mL plastic Autosampler tubes.

5.7 50-mL plastic Autosampler tubes with caps.

6.0 Reagents and Standards

6.1 All reagents may contain impurities that may affect the integrity of the analytical results. Due to the high sensitivity of ICP-MS, high-purity reagents, water, and acids must be used whenever possible. All acids used for this method must be of ultra high-purity grade. Nitric acid is preferred for ICP-MS in order to minimize polyatomic interferences. It should be noted that hydrochloric acid is required to maintain stability in solutions containing antimony and silver. When hydrochloric acid is used, corrections for polyatomic ion interferences must be used.

Note: This SOP uses 50-mL and 10-mL autosampler vials to prepare all stock standards and working level solutions. All solutions prepared in these vials are made up to volume using the graduations marked on the side of each vial. The accuracy of these markings has been found to be sufficient for the pupose of the analyses described by this SOP. The accuracy of other brands of autosampler tubes has not been tested and should be investigated before used in this manner. To satisfy laboratory-specific quality assurance programs the user may have to perform a comparability study showing that this method gives the accuracy required by the user.

6.2 Nitric acid, concentrated. Trace Metal grade (Ultra-pure from sub-boiling distillation is preferred). Suggested suppliers include: Seastar - Sub-boiling distilled grade, Sidney, BC; J. T. Baker - ULTREX Grade; and Fisher - Optima Grade.

6.3 Reagent water equivalent to ASTM Type I water (ASTM D 1193).

6.4 1:1 (vol/vol) nitric acid.

6.4.1 Prepare by adding 50 mL concentrated nitric acid to 50 mL reagent water in a clean 125 mL HDPE bottle.

6.5 Stock solutions:

6.5.1 Rhodium, 1000 mg/L
6.5.2 Magnesium, 1000 mg/L
6.5.3 Germanium, 1000 mg/L
6.5.4 Gold, 1000 mg/L
6.5.5 Indium, 1000 mg/L
6.5.6 Mercury, 1000 mg/L
6.5.7 Cerium, 1000 mg/L
6.5.8 CPI multi-element solution specific for ICP-MS, 10 mg/L or equivalent
6.5.9 CPI internal standard solution, 100 mg/L or equivalent
6.5.10 CPI tuning solution, 10 mg/L or equivalent
6.5.11 SCP Science multi-element solutions, 100 mg/L
6.5.12 CPI multi-element solutions, 100 mg/L
6.5.13 SCP Science Cation solution, 1000 mg/L
6.5.14 CPI Cation solution, 1000 mg/L

6.6 Auto lens solution Stock: 1.0 mg/L

6.6.1 Prepare by pipetting 5000 µL of 10 mg/L CPI tuning solution into a 50 mL autosampler tube. Add 0.5 mL concentrated nitric acid and dilute to 50 mL with reagent water.

6.7 Auto lens solution: 10 µg/L

6.7.1 Prepare by pipetting 500 uL of Auto lens Stock solution (6.6) into a 50 mL autosampler tube, add 0.5 mL of concentrated nitric acid and dilute to 50 mL with reagent water and mix well.

6.8 Internal Standard Stock Solution: ~0.2 mg/L Li^6, Sc, Y, In, Tb, Ho, and Bi; 2.0 ppm Ge and 2.0 ppm Au in 5% nitric acid.

6.8.1 Prepare by pipetting each of the following stock solutions into a tared 1L polyethylene bottle previously cleaned with nitric acid.

6.8.1.1 2 mL of CPI Internal Standard stock solution.
6.8.1.2 2 mL of 1000 mg/L Germanium stock solution.
6.8.1.3 2 mL of 1000 mg/L Gold stock solution.

6.8.2 Add 50 mL trace metal grade nitric acid and dilute to 1000 ml with reagent water.

6.9 Calibration stock.

6.9.1 1.0 mg/L stock calibration solution. Pipette 500 uL each of the 100 mg/L SCP Science multi-element solutions into a 50 mL autosampler tube, add 0.5 mL trace metal grade nitric acid, dilute to 50 mL with reagent water, and mix well.

6.9.2 10 mg/L stock Hg solution. Pipette 5.0 mL of the 1000 mg/L Hg solution into a 50 mL autosampler tube, add 0.5 ml trace metal grade nitric acid, dilute to 50 mL with reagent water, and mix well. A 100 ug/L stock Hg solution must also be prepared as follows: Pipette 0.5 mL of the 10 mg/L stock Hg solution into a 50 mL autosampler tube, add 0.5 ml trace metal grade nitric acid, dilute to 50 mL with reagent water, and mix well.

6.9.3 100 mg/L stock Cation solution. Pipette 5.0 ml of the 1000 mg/L SCP Science Cation solution into a 50 mL autosampler tube, add 0.5 mL trace metal grade nitric acid, dilute to 50 mL with reagent water, and mix well.

6.10 QCS stock - the QCS stock MUST BE from a source independent of that used for calibration.

6.10.1 1.0 mg/L stock QCS solution. Pipette 500 uL each of the 100 mg/L CPI multi-element solutions into a 50 mL autosampler tube, add 0.5 mL trace metal grade nitric acid, dilute to 50 mL with reagent water, and mix well.

6.10.2 10 mg/L stock Hg QCS solution. Pipette 5.0 mL of the 1000 mg/L Hg solution into a 50 mL autosampler tube, add 0.5 ml trace metal grade nitric acid, dilute to 50 mL with reagent water, and mix well. A 100 ug/L stock Hg QCS solution must also be prepared as follows: Pipette 0.5 mL of the 10 mg/L stock Hg solution into a 50 mL autosampler tube, add 0.5 ml trace metal grade nitric acid, dilute to 50 mL with reagent water, and mix well.

6.10.3 100 mg/L stock Cation QCS solution. Pipette 5.0 mL of the 1000 mg/L CPI Cation solution into a 50 mL autosampler tube, add 0.5 mL trace metal grade nitric acid, dilute to 50 mL with reagent water, and mix well.

6.11 Calibration standards: Prepare fresh single or multi-element calibration standards weekly as appropriate for analysis. All solutions, including calibration blanks, calibration standards, samples, and quality control standards or samples should be spiked with 1000 µL of the Internal Stock Solution from Section 6.8 per 10 mL of solution.

6.11.1 Calibration Blank:

6.11.1.1 Fill a 50 mL autosampler tube with reagent water. Add 5.0 mL of internal standard solution and mix well either by inverting the tube several times or vortexing.

6.11.2 Calibration Standard 1: 10 µg/L or 1.0 ug/L Hg, or 1.0 mg/L Cations.

6.11.2.1 Fill a 50 mL autosampler tube with approximately 20 mL of reagent water. Pipette 500uL of 1.0 mg/L Stock calibration solution, or 0.1 mg/L Stock Hg, or 100 mg/L Stock Cation solutions and dilute to 50 mL with reagent water. Add 5.0 mL of internal standard solution and mix well either by inverting the tube several times or vortexing.

6.11.3 Calibration Standard 2: 20 µg/L or 2.0 ug/L Hg, or 2.0 mg/L Cations.

6.11.3.1 Fill a 50 mL autosampler tube with approximately 20 mL of reagent water. Pipette 1.0 mL of 1.0 mg/L Stock calibration solution, or 0.1 mg/L Stock Hg, or 100 mg/L Stock Cation solutions and dilute to 50 mL with reagent water. Add 5.0 mL ofinternal standard solution and mix well either by inverting the tube several times or vortexing.

6.11.4 Calibration Standard 3: 100 µg/L or 10 ug/L Hg, or 10 mg/L Cations.

6.11.4.1 Fill a 50 mL autosampler tube with approximately 20 mL of reagent water. Pipette 5.0 mL of 1.0 mg/L Stock calibration solution, or 0.1 mg/L Stock Hg, or 100 mg/L Stock Cation solutions and dilute to 50 mL with reagent water. Add 5.0 mL of internal standard solution and mix well either by inverting the tube several times or vortexing.

6.12 QCS Standard: 40 ug/L or 4.0 ug/L Hg or 4.0 mg/L Cations.

6.12.1 Fill a 50 mL autosampler tube with approximately 20 mL of reagent water. Pipette 2.0 mL of 1.0 mg/L Stock QCS solution, or 0.1 mg/L Stock Hg QCS, or 100 mg/L Stock Cation QCS and dilute to 50 mL with reagent water. Add 5.0 mL of internal standard solution and mix well either by inverting the tube several times or vortexing.

6.13 Dual Detector Cross-Calibration Solution: 200 ug/L.

6.13.1 10 mg/L stock solutions must be prepared from the 1000 mg/L Rh, 1000 mg/L Ge, 1000 mg/L Gold, and 1000 mg/L Hg solutions by adding 0.5 mL of each to separate 50 mL autosampler tubes, adding 0.5 mL of trace metal grade nitric acid, and diluting to 50 mL with reagent water. 10 mg/L stock solutions must be prepared from the 100 mg/L CPI internal standard solution and the SCP Science multi-element solutions by adding 5.0 mL of each to separate 50 mL autosampler tubes, adding 0.5 mL of trace metal grade nitric acid, and diluting to 50 mL with reagent grade water. Dual detector solution is prepared by adding 1.0 mL of each of the 10 mg/L stock solutions to a 50 mL autosampler tube, adding 0.5 mL of trace metal grade nitric acid, and diluting to 50 mL with reagent grade water.

6.14 Mass Calibration solution : 10 ug/L

6.14.1 10 mg/L stock solutions must be prepared from the 1000 mg/L Rh, 1000 mg/L Ce, and 1000 mg/L In by adding 0.5 mL of each to separate 50 mL autosampler tubes, adding 0.5 mL of trace metal nitric acid, and diluting to 50 mL with reagent water. Mass calibration solution is prepared by adding 2 mL each of the 10 mg/L Rh, Ce, In, and CPI multi-element solution specific for ICP-MS to a 200 mL volumetric flask, containing about 100 mL of reagent water and 2 mL of trace metal grade nitric acid, and diluting to volume with reagent water. Mix well and transfer the solution to a 250 mL polyethylene bottle, previously cleaned with nitric acid.

7.0 Sample Collection, Preservation, and Storage

7.1 Sample collection, preservation, and storage concerns are beyond the scope of this SOP, which deals with the operation of the ELAN 6100 ICPMS and the direct analysis of samples only. Please consult section 8.0 of Method 200.8[1] directly for information on this topic.

8.0 Quality Control

8.1 Initial Demonstration of Laboratory Performance - The following items must be completed before the analysis of any samples is performed by each laboratory using this method and redetermined yearly.

8.1.1 Linear calibration ranges

8.1.1.1 Calibrate the instrument, as described in **Section 9.**

8.1.1.2 Run a series of increasing concentration standards close to the upper linear range of the instrument. It is suggested that multi-element standards be used for this procedure whenever possible.

8.1.1.3 The Upper Linear Dynamic Range limit is defined as the concentration where the measured value is within 10% of the actual prepared value of the standard.

8.1.1.4 The Upper Linear Dynamic Range should be redetermined when ever one of the following occurs

8.1.1.4.1 A new detector is installed

8.1.1.4.2 The detector (analog and/or pulse count) voltages are changed

8.1.1.4.3 A new PA tube is installed in the RF generator

8.1.1.4.4 A different sample introduction system (change in nebulizer or spray chamber type) is installed.

8.1.2 Quality Control Sample (QCS) Analysis - QCS analysis must be performed whenever one of the following occurs

8.1.2.1 When beginning the use of this method

8.1.2.2 Quarterly or as required to meet Data Quality Objectives

8.1.2.3 To verify the calibration standards

8.1.2.4 Whenever the QCS is analyzed the results must be within ± 10% of the stated value. If the QCS is not within limits, an immediate second analysis should be performed to confirm unacceptable performance. If the second analysis result is unacceptable the analysis should be terminated and the source of the problem identified before continuing.

8.1.3 Instrument Detection Limits (IDLs) should be determined for all analytes

8.1.3.1 Calibrate the instrument.

8.1.3.2 Run a blank as if it were a sample for a series of 10 sequential measurements with rinsing in between each measurement.

8.1.3.3 Calculate the standard deviation of the 10 measurements of the blank concentration for each isotope.

8.1.3.4 Multiply the standard deviation by three to obtain the IDL.

8.1.3.5 IDLs should be redetermined whenever the following occurs:

8.1.3.5.1 Annually

8.1.3.5.2 New analyst running the instrument

8.1.3.5.3 Any change to the sample preparation procedure

8.1.3.5.4 Any significant change to the instrument (new detector, detector voltages changed, or different sample introduction system used.)

8.1.4 Method detection limits (MDLs) should be established for all analytes

8.1.4.1 Fortify a reagent blank with a concentration of each analyte that is two to five times the estimated detection limit (the IDL can be used to estimate this). This solution is called the MDL solution.

8.1.4.2 Take seven replicate aliquots of this solution and process through the entire method (including any sample preparation steps). Calculate the standard deviation of the measured concentrations for the seven aliquots. Multiply the standard deviation by 3.14 (student's t value for 99% confidence level and n=7) to obtain the Method Detection Limit (in concentration units).

8.1.4.3 The MDLs must be sufficient to detect analytes at the required levels according to compliance monitoring regulation.

8.1.4.4 MDLs should be redetermined whenever the following occurs:

8.1.4.4.1 Annually

8.1.4.4.2 New analyst running the instrument

8.1.4.4.3 Any change to the sample preparation procedure

8.1.4.4.4 Any significant change to the instrument (new detector, detector voltages changed, or different sample introduction system used.)

8.2 Mandatory Laboratory Performance Quality Assurance Procedures

8.2.1 Laboratory Reagent Blank (LRB): A minimum of one LRB must be run every batch of 20 samples of the same matrix.

8.2.1.1 LRB values greater than the MDL indicate laboratory or reagent contamination.

8.2.1.2 When LRB values constitute 10% or more of the analyte level or is 2.2 times the analyte MDL, whichever is greater, fresh aliquots of the samples must be prepared and analyzed again for the affected analytes after the source of contamination has been identified, corrected, and verified with acceptable LFB performance.

8.2.2 Laboratory Fortified Blank (LFB)

8.2.2.1 One LFB must be analyzed with each batch of samples.

8.2.2.2 The LFB is prepared by spiking an aliquot of the Laboratory Reagent Blank with each analyte at a concentration between 40 µg/L and 100 µg/L, except selenium and mercury. Selenium should be at a concentration between 200 and 500 µg/L, while mercury should be between 2 and 5 µg/L. The LFB must be carried through all the procedures with which the samples are subjected.

8.2.2.3 The percent recovery is calculated according to the following:

$$R = \frac{LFB - LRB}{s}$$

Where:

R:	Percent Recovery
LFB:	Lab Fortified Blank Results
LRB:	Lab Reagent Blank Results
s:	amount of spike added (in concentration units)

8.2.2.4 The Percent Recovery for the LFB shall be within the required control limits of 85- 115%. If the recovery is not in control, the source of the problem should be identified and resolved before analysis is continued.

When sufficient internal performance data becomes available (usually a minimum of 20- 30 analyses) control limits for the LFB should be determined from the mean percent recovery. Upper and Lower control limits should be calculated using the following equations:

Upper Control Limits = X + 3S
Lower Control Limit = X - 3S

Where:
S: Standard Deviation of last 20 measurements
X: Mean Value

The optional control limits must be equal to or better than the required control limits of 85 - 115%.
All optional control limits should be updated after every 5 - 10 measurements using the most recent 20 - 30 data points. All such data should be kept on file and available for review.

8.3 Laboratory Fortified Matrix - LFM (Required)

8.3.1 The laboratory must spike a known amount of analyte into minimum of 10% of all samples.

8.3.2 The aliquot used for the LFM must be a duplicate of the aliquot used for sample analysis and total recovery analyses prior to sample preparation.

8.3.2.1 For aqueous samples the added analyte concentration must be the same as that used in the Laboratory Fortified Blank (LFB).

8.3.2.2 For solid samples, the concentration of analyte added should be 100 mg/kg (equivalent to 200 µg/L in the analysis solution), except for silver, which should be limited to 50 mg/kg (100 µg/L).

8.3.3 Calculate the percent recovery for the LFM as follows:

$$R = \frac{C_s - C}{s} * 100$$

Where:
R: Percent Recovery
C_s : Measured concentration in fortified sample matrix
C : Measured concentration in unfortified sample
s: amount of analyte added to sample matrix

The recovery of the LFM should be within the designated acceptance range of 70- 130%. If it is not within this range, and the LFB recovery is acceptable, the data user should be informed that the result in the unfortified sample is suspect due to heterogeneity or an uncorrected interference effect

Note: Recovery calculations are not required if the concentration of the analyte added is less than 30% of that present in the sample.

8.4 Internal Standard Responses (Required)

8.4.1 The internal standard intensities for all internal standards used should be monitored and compared to the intensity in the calibration blank.

8.4.2 The intensities of the internal standards in all samples, QC, and continuing calibration checks should be within 60-125% of the original response in the calibration blank.

8.4.2.1 If the responses are not within the above limits, flush the system with the rinse blank and monitor the intensities of the internal standards in the calibration blank.

If the intensities are now within the limits, take a fresh aliquot of the sample and dilute by a factor of two and add appropriate internal standards and reanalyze.

If the intensities in the calibration blank are not within the limits, an irreversible blockage of the sample cones has probably occurred and the instrument should be recalibrated.

9.0 Calibration and Standardization

9.1 The instrument must be calibrated before analysis of any samples with at least a blank and one calibration standard. Multiple standards are recommended.

9.1.1 The concentrations of the standards used should be entered into the calibration page of the analytical method in the ELAN software according to the values of the standards prepared in Section 6.10.

9.1.1.1 A Linear Through Zero curve type should be selected for all analytes.

9.1.1.2 The calibration blank will be run as a blank, before the analysis of any actual calibration standards.

9.1.1.3 The first standard run should be the lowest level standard containing analyte, followed by standards of increasing concentration in order to minimize cross-contamination and carryover.

10.0 Procedure

10.1 Initiate the plasma and allow a warm-up of at least 30 minutes. The tuning procedures may be carried out during warm-up, but is usually initiated after the 30 minute warm-up time. Click on the **Instrument icon** in the top taskbar, and click on the **Plasma start** button. The plasma initiation takes about 45 seconds. After plasma is initiated, click on the **peristaltic pump icon** in the top taskbar and click on the arrow pointing to the right, to indicate counter-clockwise turning of the pump. Be sure to change the sample tubing daily, and the rinse and waste tubing as needed. If the probe is not at the rinse station, click on the **method icon** in the upper task bar, select **sampling**, select **autosampler**, select **move probe**, select **to rinse**, select **Ok**.

10.2 X-Y Adjustment:

10.2.1 Open **File** menu then go to **Open Workspace**, or click on the **open folder icon** in the top taskbar.
10.2.2 Select **X-Y.wrk** then click **Open**.
10.2.3 Place probe in the 10 ug/L **Mass Calibration Solution**, and allow the solution aspirate.
10.2.4 Click on **Analyze Sample**.
10.2.5 Look at the **Realtime** window and watch the Rh intensities.
10.2.6 Adjust the two black knobs near the torch box until the highest Rh intensities are seen.
10.2.7 Click **Cancel**.

10.3 Nebulizer Gas Flow:

10.3.1 Repeat step 10.2.1.
10.3.2 Select **Neb Lens Power Optimization.wrk** then click **Ok**.
10.3.3 Select the **Auto Optimize** tab.
10.3.4 In the parameter description box choose **Nebulizer Gas Flow**.
10.3.5 Click on the **Method** icon in the top taskbar and select **File**, **Open**, and **NEBFLOWREV**. This method not only monitors Rh intensities, but Ce and CeO intensities as well. The method window can be closed after selection.
10.3.6 Click on the **Get Analyte List** tab to select Rh, Ce, and CeO.
10.3.7 Click on the **Formula** circle at the bottom of the window under **Optimization Criteria**.
10.3.8 Select the correct analytes so the formula reads Ce/CeO<0.03. The oxides MUST be <0.05 at most, but the optimum oxides is 0.03.
10.3.9 Place probe in the 10 ug/L **Mass Calibration Solution**, and allow the solution to aspirate.
10.3.10 Click **Optimize**. If the formula criteria is not met after optimization, the range of the start and end values must be lowered to meet the criteria.
10.3.11 When optimization is complete, click on **File**, **Save**.

10.4 Lens Voltage Optimization:

10.4.1 Repeat steps 10.3.1 through 10.3.3.
10.4.2 Select **Lens Voltage in Parameter Description.**
10.4.3 Click on the **Method** icon in the top taskbar and select **File, Open,** and **Optimize.** This method monitors only Rh. The method window can be closed after selection.
10.4.4 In the **Interactive** window, click on **Analytes.** If Rh is not in the **Analytes Selected** box click on **Add All** then click **Ok.**
10.4.5 Place probe in the 10 ug/L **Mass Calibration Solution,** and allow the solution to aspirate.
10.4.6 Adjust the range of the start and end values for complete optimization and click **Optimize.**
10.4.7 Once optimization is complete, select **File, Save.**

10.5 Autolens Optimization:

10.5.1 Repeat step 10.2.1.
10.5.2 Select **Autolens Calibration.wrk** then click **Open.**
10.5.3 Select the **Autolens** tab.
10.5.4 Click on **Clear Calibration,** select **Yes,** and click on **Get Analyte List.**
10.5.5 Place probe in the 10 ug/L **Autolens** solution, and allow the solution to aspirate.
10.5.6 Adjust the start and end values for complete optimization and click on**Calibrate.**
10.5.7 Once calibration is complete, click on the **Interactive** window to see if the lens vs. mass plot is somewhat linear. If not linear, repeat step 10.5.6.
10.5.8 Once calibration complete and somewhat linear, check the slope of the line to make sure it is less than 0.02. If greater than 0.02, see **Addendum 1: Maintenance Procedures.** Select **File, Save.**

10.6 Tuning and Mass Calibration Optimization:

10.6.1 Repeat step 10.2.1.
10.6.2 Select **Tuning.wrk** and click **Open.**
10.6.3 Place probe in the 10 ug/L **Mass Calibration Solution,** and allow to aspirate.
10.6.4 Click on **Tune Mass Spec.**
10.6.5 Repeat step 10.6.4 until **Measured Peak Width** reads 0.65 +/- 0.01 amu at 10% peak height by setting the DAC values. To adjust DAC values, click on the element of interest, and click either up (to lower the amu) or down (to raise the amu).
10.6.6 Once tuning is complete, select **File, Save.**
10.6.7 Print the tuning window using Paintbrush, if documentation is required

Note: It has been shown that 0.65 amu at 10% peak height is equivalent to 0.75 amu peak height at 5% peak height. See Appendix II.

Note: Using the Clock feature in Windows a data/time stamp can be added to the printout by dragging the clock onto the tuning window.

10.7 Daily Performance:

10.7.1 Repeat step 10.2.1.
10.7.2 Select **Daily Performance.wrk** and click Open.
10.7.3 Place probe in the 10 ug/L **Mass Calibration Solution,** and allow to aspirate.
10.7.4 Click on **Analyze Sample.**
10.7.5 The Daily Performance document will automatically print out once analysis is complete.
10.7.6 Review the printout. Peak performance values are as follows:
10.7.6.1 Background: <30
10.7.6.2 Rh: >150,000
10.7.6.3 Mg: >20,000
10.7.6.4 Pb: >100,000
10.7.6.5 CeO/Ce: <0.03, up to 0.05 at the most
10.7.6.6 Ba++/Ba: <0.03

10.7.6.7 Noise (standard deviation of background intensities): <5

10.7.7 If performance is acceptable, analysis may begin. If not, refer to **Attachment 1**.

10.8 To begin analysis, Repeat step 10.2.1 and select **Quantitative Analysis.wrk** and click **Open**. Select a new dataset file by clicking on the **Dataset** icon in the top taskbar. Select **File**, **New**, and name the new file by typing in the date of analysis in the following format: **MMDDYY**. Click on **Ok** to save the file.

10.9 Prepare calibration standards as in Section 6.11.

10.10 Make any desired changes to the method and save method under a different name (The EPA200.mth method is write protected.), if a new method is required.

10.10.1 Load the calibration blank and calibration standards into the autosampler positions specified in the autosampler page of the analytical method.

10.10.2 Load the Quality Control samples defined in the QC checking part of the method into the autosampler according to the positions entered in the QC Autosampler page of the method. (See the QC Manual for more information on setting up Quality Control Protocols.)

10.11 Edit the Sample window for batch analysis to update with new sample information.
Note: Only enter sample, QC spike, QC duplicate, QC dilution, or reagent blank information in the batch sample page. Calibration standards and QC standards are defined in the relevant sections of the Method.

10.11.1 Load the applicable method for the sample batch.

Note: If automatic QC checking is used the method must be the same for all samples.

10.11.2 The Calibration action for the first sample for which concentration results are desired must be "analyze blank, standards, and sample"

10.11.3 The calibration action for all other samples is usually "Analyze Sample", unless periodic recalibration is desired.

10.11.4 Enter peri-pump control speeds for all samples

10.11.5 Save Sample file, and print 2 copies of the file by clicking on the **Printer** icon in the top taskbar, select **Browse**, select the appropriate **.rop** method, select **Open**, and select **Print**.

10.11.6 Re-Open the sample file (this must be done for the batch QC to run properly)

10.11.7 Load the samples into the autosampler positions specified in the Sample file.

10.11.8 Select the samples to be analyzed by highlighting the row number with the mouse, or clicking on the upper left box in the sample window to highlight the whole file.

10.11.9 Select "Analyze Batch"

Note: Aspirate the rinse blank for 5-10 minutes before beginning a batch run to avoid carry-over and contamination. Review the intensities of Ag in the calibration blank. If the intensity is >500, rerun the calibration blank until the intensity is <500.

11.0 Data Analysis and Calculations

11.1 All calculations necessary to convert raw data (ion counts/second) are performed by the ELAN NT software. The calculated quantities are selected by choosing the desired options in the Report Options screen. The default report option for the ELAN NT 200.8 Method is EPA200 QCReport.rop. If the user desires, this format can be edited and saved under a new name.

11.2 All calculations performed in the ELAN NT software are based on the ratio of the analyte intensity (cps) to the internal standard intensity (cps). In all calculations where internal standards are used (**Note:** Method 200.8 requires the use of internal standards) the ratio of the analyte intensity to internal standard intensity is taken before any other calculation is performed.

11.3 Quality Control Sample results may be checked using the QC Checking features in the ELAN NT software. All values entered in the default ELAN NT Method 200.8 should be checked and edited to match the true values used by the laboratory. The modified method can then be saved under a different name.

12.0 Method Performance

Example method performance data generated using the methods described by this SOP can be seen in Appendices III-V.

13.0 Troubleshooting

The following sections describe some commonly occurring problems and proposed solutions.

13.1 Poor recovery on selected Quality Control Analytes: If poor recoveries are obtained on only particular analytes in a Quality Control Standard and it had been verified that the sample has been properly prepared, it may be possible that the problem could be related to a problem with the internal standard used. Look atthe entire list of elements grouped with an internal standard. If the results for all elements is not satisfactory but the results for other elements not grouped with that internal standard are acceptable, there could be a problem with the internal standard used for that grouping.

13.1.1 Try using a different internal standard and reprocessing the data.

13.1.2 Look at the monitored intensities of the internal standards. If the internal standard used for the elements with unacceptable results is not within the allowable range or the percent recovery for this internal standard significantly different that the others, use a different internal standard and reprocess the data.

13.2 Poor relative standard deviation (precision) on standards and samples.

13.2.1 Poor RSDs can be caused by many things. First check that the interface cones are in good condition and the orifices of both cones are round and of the proper size.

13.2.2 Check that the nebulizer is operating properly by checking the aerosol with theplasma off and the spray chamber removed. Turn on the nebulizer gas and the peristaltic pump - there should be a visible aerosol leaving the spray chamber. If there is not, clean or replace the nebulizer gem tips.

13.2.3 Check that the peristaltic pump tubing is in good condition and not worn. When the autosampler probe is removed and reinserted in the wash solution an air bubble will be visible in the tubing. Watch the progress of this bubble and adjust the tension on the pump tubing so the flow is smooth without any pulsation.

13.3 Sequence occurs improperly on startup of a batch analysis.

13.3.1 The sample file has either not been saved or re-opened properly. Save the sample file and then reopen this same sample file. The full path name of the method should appear in the Method field of the sample list.

13.4 Elevated recoveries for Se at mass 82 could indicate the presence of bromide. If bromide is monitored at masses 79 and 81 a correction can be performed.

14.0 Appendices and Addendums (see attached pages)

14.1 Addendum I: Maintenance procedures
14.2 Addendum II: Drinking water QC requirements
14.3 Appendix I: Table of the isotopes monitored and equations used
14.4 Appendix II: Plot of mass calibration
14.5 Appendix III: IDL, MDL, and Linear Ranges
14.6 Appendix IV: QCS Results and Spike Recoveries
14.7 Appendix V: Precision and Recovery Data
14.8 Appendix VI: Optimization Procedures Flow Chart

15.0 References

15.1 "Methods for the Determination of Metals in Environmental Samples- Supplement 1", EPA-600/R-94-111, May 1994, Available at NTIS, PB 94-184942.

15.2 ELAN 6000 Hardware Manual, 1995, Perkin-Elmer Corporation.

15.3 ELAN 6000 ICP-MS Software Manual, 1995, Perkin-Elmer Corporation.

Reviewed By: Barbara Hebert 3/23/01 Analyst

Renee Stipper 3/23/01 Analyst

Denise Jenner 3-23-01 Quality Assurance Coordinator

[illegible] 3/23/01 Laboratory Manager

ADDENDUM I
Maintenance Procedures

The following includes some troubleshooting guides in diagnosing and correcting problems in the instrument optimization.

1. Refer to the maintenance manual for directions on how to change and align the torch, clean and change interface cones, and changing the lens.

2. Symptom: Rh intensities low.
   Possible cause:
   a) Nebulizer flow not optimized; Solution: Run nebulizer flow optimization
   b) Interface cone condition; Solution: Replace interface cones, or clean cones according to the maintenance manual.
   c) Detector voltages not optimized; Solution: Run pulse, analog, pulse, dual detector optimizations as described in 7-9.
   d) Plug in nebulizer; Solution: Replace gem tips according to maintenance manual, clean gem tips by sonicating in ~10% nitric acid for 15 minutes, or institute a backflow of argon gas through the gem tips.
   e) Plug in sample line; Solution: Pass a wire through the probe and probe tubing. Silver nitrate sometimes precipitates out and is identified as a black solid. A wire should be passed through the probe and tubing at least once a month to free the silver nitrate solids.

3. Symptom: High oxides with lowered Rh intensities.
   Possible cause: Interface cone condition; Solution: See 2b.

4. Symptom: High doubly charged ions
   Possible cause: Interface cone condition; Solution: See 2b.

5. Symptom: Autolens slope >0.02
   Possible cause: Dirty lens; Solution: Remove lens according to the maintenance manual. Replace with back up lens. Clean dirty lens by sonicating in ~ 1% nitric acid for 15 minutes. Gloves are required when handling the lens.

6. Symptom: Sudden extinguishing of the plasma
   Possible cause: Leak in sample introduction system or torch box; Solution: Check all connections to ensure leak free connections.

7. Pulse Stage optimization:
   a) Open **File** menu then click on **Open Workspace**, or click on the **Open Folder** icon in the top taskbar.
   b) Select **Pulse Stage Optimization.wrk** then click **Open.**
   c) Place probe in the 10 ug/L **Mass Calibration Solution**, and allow it to aspirate.
   d) Select the **Pulse Stage Optimization** in the **Parameter description box**, set the start and end values to ensure complete optimization, and click on **Optimize.**
   e) Repeat step d) if optimization could not be met, changing the start or end values.
   f) When optimization is met, click on **File, Save.**
   g) Pulse stage detector voltages should be less than 2000 volts. If the voltage is > 2000, the detector is suspect as being damaged.

8. Analog Stage optimization:
   a) Repeat step 7 a).
   b) Select **Analog Stage Optimization.wrk** then click **Open.**
   c) Prepare a 10 mg/L Magnesium Stock solution by adding 0.5 mL of the 1000 mg/L Mg Stock solution and 0.5 mL of trace metal grade nitric acid to a 50 mL autosampler tube half full of reagent water and dilute to 50 mL with reagent water. Prepare a 200 ug/L Mg solution by adding 1.0 mL of the 10 mg/L stock Mg solution and 0.5 mL of trace metal grade nitric acid to a 50 mL autosampler tube half full of reagent water and diluting to 50 mL with reagent water. Place probe in the 200 ug/L **Mg Solution**, and allow it to aspirate.
   d) Select the **Analog Stage Optimization** in the **Parameter description** box, set the start and end values to ensure complete optimization, and click on **Optimize.**

e) If optimization is not met the program will automatically be rerun until optimization is met. **NOTE:** If analog stage optimization is performed, the Dual Detector Optimization **MUST** be performed.
f) When optimization is met, click on **File, Save.**
g) Analog stage detector voltages should be greater than –2500 volts. If the voltage is <-2500, the detector is suspect as being damaged.

9. Pulse Stage optimization must be performed again immediately following Analogstage optimization by repeating steps 7 a) through 7 f).

10. Dual Detector Optimization:
    a) Repeat step 7 a).
    b) Select **Dual Detector Optimization.wrk** then click **Open.**
    c) Place probe in the 200 ug/L **Dual detector solution,** and allow to aspirate.
    d) Choose the **Dual Detector** tab, click on **Clear Calibration,** click **Yes,** click on **Get Analyte List,** then click on **Calibrate.**
    e) Optimization takes approximately 15 minutes to complete.
    f) When calibration is complete, click on **File, Save.**

11. Pulse, analog, and dual detector optimization and calibration is required only when anew detector is installed or the voltages change. Voltage changes are suspect when Rh intensities run low or when Tl and/or Pb fail QC requirements.

ADDENDUM II
Drinking Water Quality Control Requirements

This addendum will address any deviations from the general Method 200.8 for drinking water analysis.

1. **Linear Dynamic Ranges (LDR):** LDR's must be analyzed annually by any analyst who performs analysis of drinking waters. Any analyte concentration > 90% of the upper LDR must be diluted and reanalyzed if the high calibration standard is the LDR. Otherwise, analyte concentrations that exceed the high standard of the linear calibration curve must be diluted and reanalyzed.

2. **Quality Control Sample (QCS):** The QCS must be analyzed at least quarterly, with each new set of calibration standards, or with each calibration routine. The QCS must be within 10% of the stated value.

3. **Method Detection Limits (MDL):** MDLs must be analyzed annually by any analyst who performs analysis of drinking waters.

4. **Laboratory Reagent Blank (LRB):** LRB values that exceed the MDL indicate laboratory or reagent contamination, or memory effects. When LRB values constitute 10% or more of the analyte level determined for a sample or is 2.2 times the analyte MDL, whichever is greater, fresh aliquots of the samples must be prepared and analyzed again for the affected analytes after the source of contamination has been corrected and acceptable LRB values have been obtained. LRBs must be analyzed with each batch of 20 or fewer samples of the sample matrix.

5. **Laboratory Fortified Blank (LFB):** A LFB must be analyzed at least once per batch of 20 or fewer samples, at a level of 40 to 100 ug/L, prepared from the same source as the calibration standards, and carried through the entire preparation scheme as the samples, with recovery limits of **85-115%.** Laboratory generated control limits must be equal to or better than **85-115%.**

6. **Continuing Calibration Verification (CCV):** The CCV must be analyzed immediately following calibration, or immediately after the QCS. The CCV is made from the same stock as the calibration standards, and must verify the instrument is within 10% of calibration. The CCB (continuing calibration blank) must be run immediately afte the CCV after calibration. The CCV and CCB must be analyzed after every tenth sample and at the end of the analytical run. The CCB should always be less than the MDL.

7. **Laboratory fortified matrix (LFM):** A matrix spike and/or matrix spike duplicate must be performed at least every 10 samples. This also includes laboratory duplicates. Control limits must be within 70-130%. Laboratory generated control limits must be equal to or better than 70-130%. Duplicate analysis must have a % RPD of 20 or less. The LFM must be prepared using the same source as the LFB.

8. **Recommended Isotopes to be monitored:** Additional isotopes and masses must be monitored for drinking waters. These isotopes and masses include 62 (Ni), 83 (Kr), 95 & 97 (Mo), 99 (Ru), 105 (Pd), 106 & 108 (Cd), 109 (Ag), 118 (Sn), and 203 (Tl).

Appendix I.
Table of the Isotopes Monitored and Equations Used

Analyte	Symbol	Isotopes Monitored	Correction Equations
Aluminum	Al	27	
Antimony	Sb	121,123	Sb 123 = Sb 123 - 0.127189 * Te 125
Arsenic	As	75	As 75 = As 75 - 3.127 * [ArCl 77 - (0.815*Se 82)]
Barium	Ba	135,137	
Beryllium	Be	9	
Cadmium	Cd	106,108,111,114	Cd 111 = Cd 111 - 1.073 * [MoO 108 -(0.712*Pd 106)] Cd 114 = Cd 114 - 0.026826 * Sn 118
Chromium	Cr	52,53	
Cobalt	Co	59	
Copper	Cu	63,65	
Lead	Pb	206,207,208	Pb 208 = Pb 208 + 1* Pb 206 + 1* Pb 207
Manganese	Mn	55	
Mercury	Hg	202	
Molybdenum	Mo	95,97,98	Mo 98 = Mo 98 - 0.110588 * Ru 101
Nickel	Ni	60,62	
Selenium	Se	77,82	Se 82 = Se 82 - 1.008696 * Kr 83
Silver	Ag	107,109	
Thallium	Tl	203,205	
Thorium	Th	232	
Uranium	U	238	
Vanadium	V	51	V 51 = V 51 - 3.127*[ClO 53 - (0.113*Cr 52)]
Zinc	Zn	66,67,68	
Internal Standards			
Lithium	Li	6	
Scandium	Sc	45	
Yttrium	Y	89	
Rhodium	Rh	103	
Indium	In	115	
Terbium	Tb	159	
Bismuth	Bi	209	
Germanium	Ge	72	
(Information	**Only)**		
Calcium	Ca	44	
Magnesium	Mg	24	
Sodium	Na	23	
Potassium	K	39	
Iron	Fe	54	Fe 54 = Fe 54 - 0.028226 * Cr 52

Appendix II.

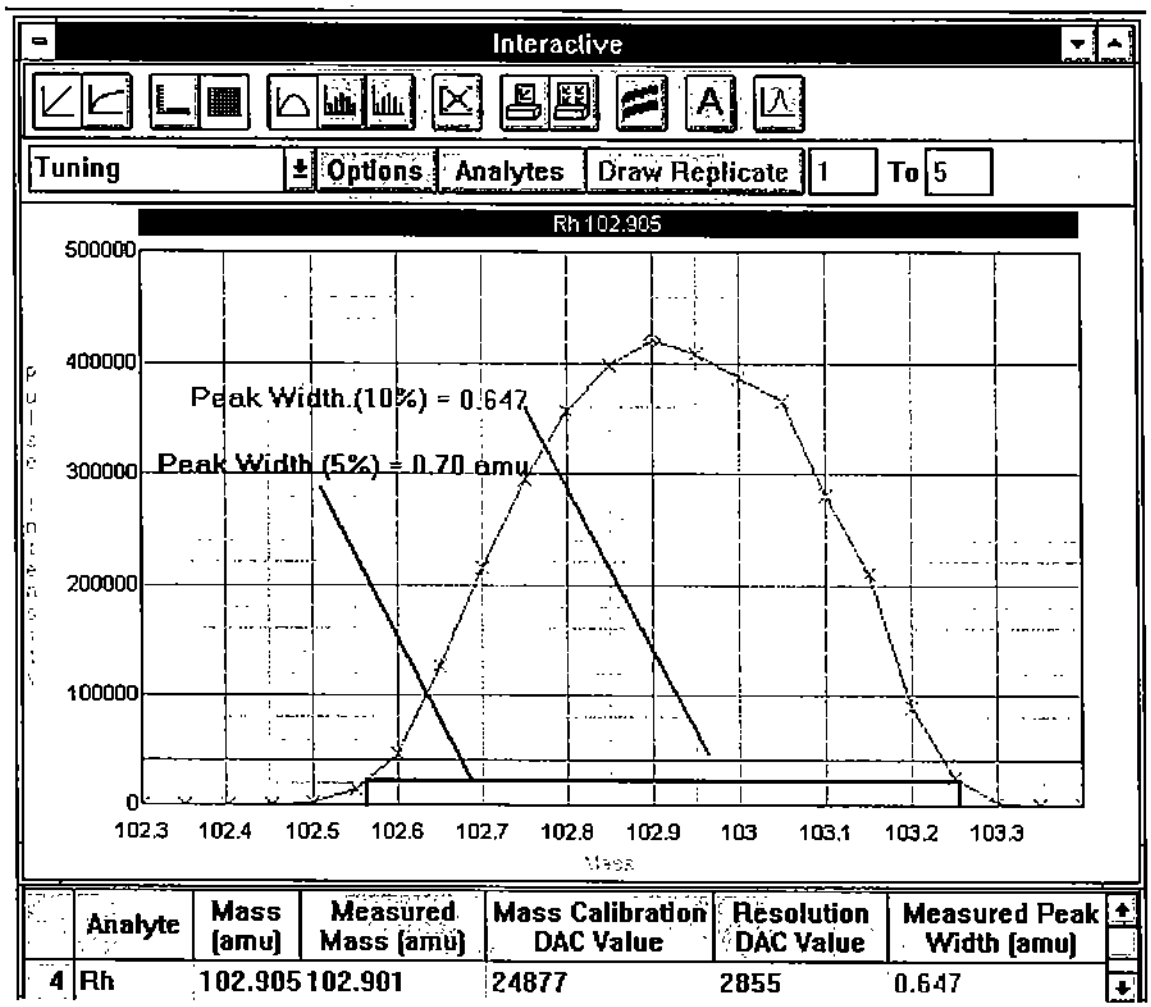

Plot of Rhodium peak for mass calibration showing relationship between peak widths measured at 10% peak height and at 5% peak height.

Appendix III.
Method 200.8 IDL, MDL, and Linear Ranges

Analyte	Mass	IDL (µg/L)	MDL (µg/L)	MDL Spike Level (µg/L)	Linear Range (mg/L)
Be	9	0.008	0.04	0.05	5
Al	27	0.007	0.03	0.5	5
V	51	0.02	0.03	0.5	5
Cr	52	0.05	0.06	0.5	5
Mn	55	0.002	0.01	0.5	5
Co	59	0.001	0.002	0.005	5
Ni	60	0.004	0.01	0.05	10
Cu	63	0.005	0.008	0.05	10
Zn	66	0.02	0.03	0.5	10
As	75	0.06	0.05	0.5	10
Se	82	0.15	0.23	0.5	5
Mo	98	0.003	0.01	0.05	10
Ag	107	0.002	0.003	0.05	10
Cd	111	0.02	0.02	0.05	10
Sb	123	0.002	0.004	0.005	20
Ba	135	0.008	0.018	0.05	10
Hg	202	0.02	0.02	0.05	20 ppb
Tl	205	0.0004	0.001	0.005	10
Pb	208	0.004	0.008	0.05	10
Th	232	0.001	0.001	0.005	10
U	238	0.0003	0.0009	0.005	10
Na*					50
Ca*					100
Mg*					50
K*					50
Fe*					100

* For information only

Appendix IV. QCS Results and Spike Recoveries for Local Drinking Water

Analyte	Mass	QCS Level (µg/L)	QC Std % Recovery	LDW Result (µg/L)	Low Spike Level (µg/L)	Low Spike Results (µg/L)	Low Spike % REC	High Spike Level (ug/L)	High Spike Results (ug/L)	High Spike % REC
Be	9	50	109.9	<0.04	10	10.62	106.1	50	51.34	102.7
Na	23	5000	95.3	46033.97	---	45730.99	---	---	46347.54	---
Mg	24	5000	96.5	9055.54	---	8971.28	---	---	9016.69	---
Al	27	50	98.7	90.20	10	98.65	84.5	50	142.55	104.7
K	39	5000	98.6	2173.89	---	2135.20	---	---	2145.07	---
Ca	44	5000	98.6	43931.86	---	43213.64	---	---	43588.15	---
V	51	50	98.0	2.69	10	12.14	94.5	50	49.15	92.9
Cr	52	50	102.3	11.21	10	19.31	81.0	50	56.21	90.0
Mn	55	50	98.4	7.69	10	16.55	88.6	50	51.98	88.6
Fe	57	5000	96.1	272.00	---	265.88	---	---	335.49	---
Co	59	50	99.9	0.20	10	9.46	92.6	50	46.04	91.7
Ni	60	50	101.3	15.29	---	---	---	50	61.42	92.3
Cu	63	50	105.2	28.42	---	---	---	50	77.73	98.6
Zn	68	50	107.9	20.02	---	---	---	50	62.52	85.0
As	75	50	105.5	1.49	10	14.91	134.2	50	65.57	128.2
Se	82	50	109.9	2.85	10	15.99	131.4	50	66.75	127.8
Mo	98	50	100.8	5.62	10	16.13	105.1	50	56.86	102.5
Ag	107	50	106.8	<0.003	10	10.01	101.8	50	47.64	95.6
Cd	111	50	103.7	<0.02	10	9.95	99.8	50	49.13	98.3
Sb	121	50	99.5	0.28	10	10.57	102.9	50	50.92	101.3
Ba	137	50	101.1	25.16	10	33.99	88.2	50	72.60	94.9
Hg	202	1	94.6	<0.02	1	0.90	88.8	4	3.43	85.5
Tl	205	50	104.5	<0.004	10	9.84	98.4	50	47.75	95.5
Pb	208	50	104.8	5.36	10	13.22	78.6	50	52.34	94.0
Th	232	50	103.6	<0.002	10	10.16	101.8	50	50.84	101.7
U	238	50	105.2	5.32	10	15.53	102.0	50	57.45	104.3

Appendix V. Precision and Recovery Data for NIST SRM 1643c "Trace Metals in Drinking Water"

Analyte	Mass	1643C Average Results (µg/L)	std dev	RSD	NIST Certified Value (µg/L)			% Recovery of Cert. Value	Spike Value (ug/L)	Average Spike Recovery (%)	S (R)	RPD
Be	9	23.28	0.06	0.25	23.2	±	2.2	100.3	50	94.5	1.3	1.4
Na	23	12546.24	153.49	1.22	12190	±	360	102.9	---	---	---	---
Mg	24	9821.49	61.83	0.63	9450	±	270	103.9	---	---	---	---
Al	27	122.36	0.63	0.51	114.6	±	5.1	106.8	50	88.5	14.0	15.8
K	39	2413.32	15.43	0.64	2300*			104.9	---	---	---	---
Ca	44	37097.15	978.44	2.64	36800	±	1400	100.8	---	---	---	---
V	51	31.32	0.23	0.74	31.4	±	2.8	99.8	50	98.4	0.1	0.1
Cr	52	19.15	0.34	1.78	19	±	0.6	100.8	50	98.8	4.8	4.8
Mn	55	35.78	0.88	2.45	35.1	±	2.2	101.9	50	91.6	5.6	6.1
Co	59	24.71	0.49	1.99	23.5	±	0.8	105.2	50	95.1	3.3	3.4
Ni	60	64.68	0.89	1.38	60.6	±	7.3	106.7	50	88.7	4.4	4.9
Cu	63	22.98	0.39	1.68	22.3	±	2.8	103.0	50	98.1	2.9	3.0
Zn	66	78.69	0.38	0.48	73.9	±	0.9	106.5	50	98.0	2.6	2.6
As	75	87.78	1.06	1.20	82.1	±	1.2	106.9	50	104.1	2.4	2.3
Se	82	12.41	0.92	7.39	12.7	±	0.7	97.7	50	94.6	4.1	4.4
Mo	98	112.46	3.66	3.26	104.3	±	1.9	107.8	50	94.9	10.5	11.0
Ag	107	2.40	0.10	4.33	2.21	±	0.3	108.4	50	103.5	7.4	7.1
Cd	111	12.39	0.10	0.82	12.2	±	1	101.6	50	94.0	0.4	0.4
Sb	121	0.04	0.02	63.57	n/a			---	50	99.2	1.8	1.8
Ba	135	54.52	2.43	4.47	49.6	±	3.1	109.9	50	94.2	7.7	8.2
Tl	205	8.71	0.01	0.15	7.9*			—	50	100.5	2.0	2.0
Pb	208	37.67	0.37	0.99	35.3	±	0.9	106.7	50	94.4	2.6	2.7
Th	232	<0.02	0.01	396.13	n/a			---	50	102.6	1.8	1.8
U	238	0.03	0.01	18.32	n/a			---	50	100.9	0.7	0.7

* Not a certified value by NIST, given for information only
n/a: not available

Appendix VI

Optimization Proceedures: Flow Chart

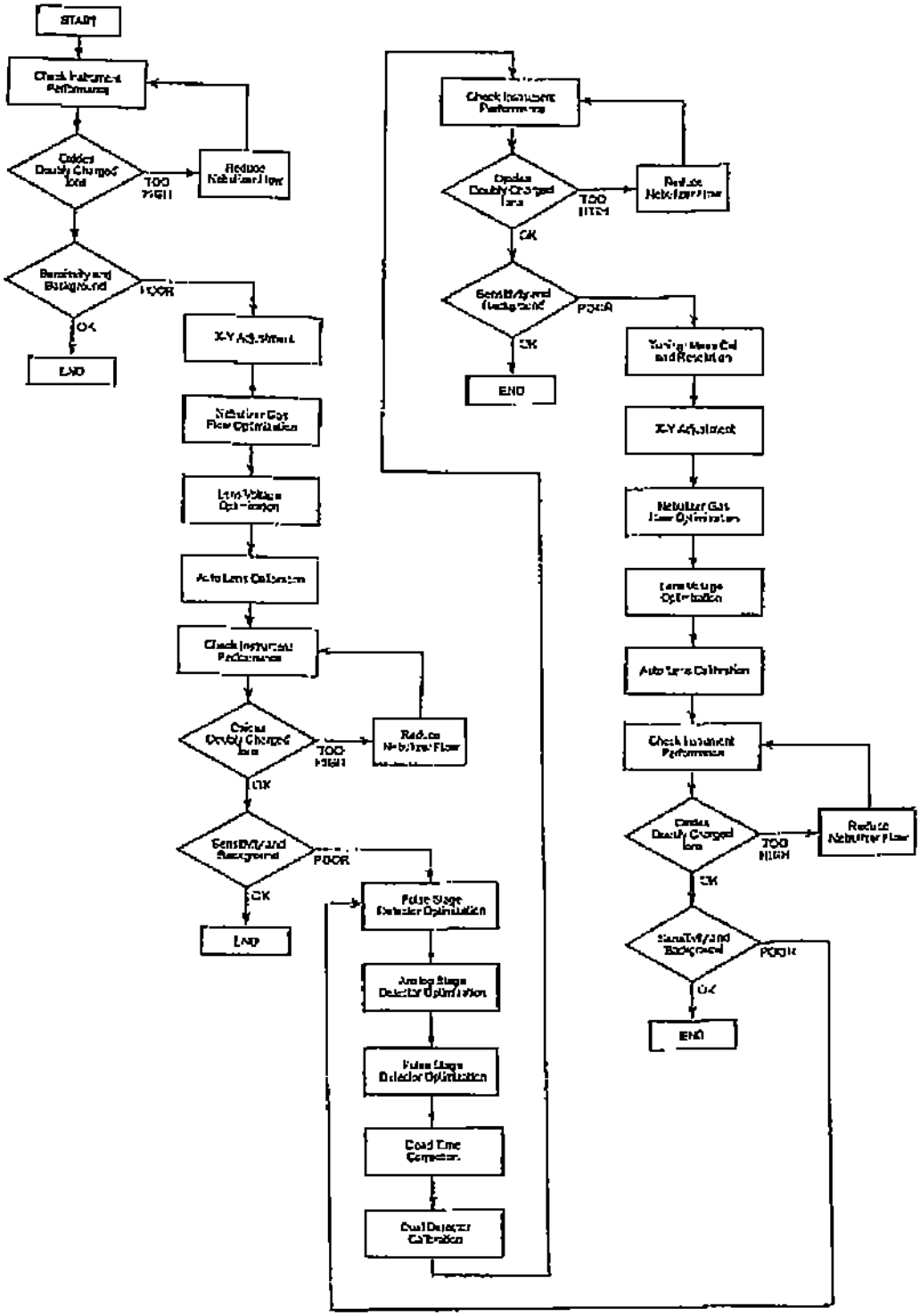

STANDARD OPERATING PROCEDURE
for
AMMONIA NITROGEN
METHOD 350.1 - AUTOMATED PHENATE

DRAFT

SCOPE AND APPLICATION:

This method is used for the determination of ammonia in drinking, surface and saline waters, and domestic and industrial wastes. The applicable range of this method is 0.01-20 mg/l NH_3 as N. The range can be extended by changing the detector sensitivity or by sample dilution.

NOTE: **The method presented in this SOP is using segmented flow analysis. Refer to Ammonia/TKN Analysis notebook for instructions using flow injection.**

SUMMARY OF METHOD:

Ammonia reacts with alkaline phenol and hypochlorite to form indophenol blue in an amount that is proportional to the ammonia concentration. The blue color is intensified with sodium nitroferricyanide. The absorbance is measured at 660 nm.

INTERFERENCES:

Precipitation of calcium and magnesium hydroxides are eliminated by the addition of EDTA complexing reagent. Turbid samples must be filtered or centrifuged prior to determination. Samples with background absorbance at the analytical wavelength may interfere.

For some interferences and for NPDES requirements, either a preliminary distillation step or the use of standard additions is necessary. This lab uses standard additions the majority of the time.

SAMPLE HANDLING AND PRESERVATION:

Samples are to be preserved with 2 ml of concentrated sulfuric acid per liter of sample and refrigerated at 4°C from collection until analysis. The holding time for preserved samples is 28 days. Determine unpreserved samples immediately upon collection.

APPARATUS:

1. Model 3590 Alpkem Flow Solution/Astoria Pacific sampler & software
2. 311 xyz sampler
3. 502A pump
4. 503 Cartridge heater
5. 509 Power distribution module
6. 510 Monochromator detector
7. Dell computer with FASPac 1.34 software
8. pH meter

9. Filter paper, Whatman #1 or #5, or equivalent
10. Magnetic stir plate and stir bars

REAGENTS:

NOTES: **For best results, filter all reagents prior to use.**
For best results, acid rinse all glassware and stir bars before using.
All reagents and calibrants are prepared with ammonia-free deionized or distilled water. See Operating Note 1 for preparation of ammonia-free deionized water.

1. Complexing Agent (EDTA)
Disodium EDTA – 64 grams
$C_{10}H_{14}N_2Na_2O_8 \bullet 2H_2O$ (FW 372.24)
Sodium Hydroxide Pellets
NaOH (FW 40.00)
Deionized Water
Dissolved 64 grams of disodium EDTA and 24 pellets of sodium hydroxide in 320 ml of deionized water contained in a 4 liter erlenmeyer flask. Add a stir bar and mix on a magnetic stir plate until completely dissolved (this may take 20 minutes). Remove the stir bar and dilute to 4000 ml with deionized water. Filter if necessary. Pour into clean 4 liter bottle (i.e. old omni water) and add 4 mls Brij-35, 30% W/V.

2. Stock 10N Sodium Hydroxide
Sodium Hydroxide - 400 grams
NaOH (FW 40.00)
Deionized Water
Cautiously add 400 grams of sodium hydroxide to approximately 700 ml of deionized water contained in a 1 liter erlenmeyer flask. Cool the solution while adding the sodium hydroxide. Cool to room temperature and dilute to 1,000 ml with deionized water. Store in a polyethylene container. Prepare monthly.
CAUTION: The dissolution of sodium hydroxide in water releases a great amount of heat.

3. Alkaline Phenol (200 ml)
10N Sodium Hydroxide Reagent - 16.5 ml
Phenol, Solid - 16.6 grams
Deionized Water
Add 16.5 mls 10 N NaOH into a 250 ml erlenmeyer flask containing approximately 100 mls of deionized water. Add 16.6 grams of phenol, dilute to 200 mls, cover with parafilm, and shake until dissolved. The solution should be either a light straw color, or an off-white color, or a slightly pink color. If the solution is dark amber or bluish color, discard. Make fresh daily.

4. Sodium Hypochlorite (1+1)
   Sodium Hypochlorite Solution
   NaOCl, 5.25% available chlorine solution (household bleach)
   Deionized Water
   Pour equal amounts of bleach and deionized water into a 250 ml amber bottle. Make daily. **NOTE:** if bleach is concentrated (labeled as "ultra" bleach) use 37 mls bleach diluted to 100 mls with deionized water.

5. Sodium Nitroferricyanide
   Sodium Nitroferricyanide - 0.25 g.
   $Na_2Fe(CN)_5NO \bullet 2H_2O$ (FW 297.97)
   Deionized Water
   Add 0.25 g. of sodium nitroferricyanide to 500 mls of deionized water in an amber bottle. Shake or stir until dissolved. Solution is stable for 3 months.

6. Sampler Wash Solution
   Deionized Water
   NOTE: Do not add H_2SO_4 acid. Baseline is more stable with deionized water only.

7. Brij Water Start-up Solution
   Add 1 ml Brij 35-30% W/V to 500 mls deionized water.

8. (1+3) Sulfuric Acid - Preservative
   Sulfuric Acid, concentrated - 50 mls
   H_2SO_4 (FW 98.08)
   Deionized Water
   Carefully add 50 mls sulfuric acid to 150 mls deionized water contained in a 250 ml amber bottle. Cool the solution before capping tightly. **NOTE:** Analyst can also use preservative made up to send out for sampling to preserve standards.

CALIBRANTS:

1. Stock 1,000 mg/l Ammonia Nitrogen Standard (500 mls)
   Ammonium Sulfate, dried at 110°C - 2.3584 grams
   $(NH_4)2SO_4$ (FW 132.15)
   Chloroform CHC13 (FW 119.38) - 1 drop
   Deionized Water
   Dissolve dried ammonium sulfate in approximately 450 mls of deionized water contained in a 500 ml volumetric flask. Dilute to 500 ml and mix well. Transfer solution to an amber bottle and preserve with chloroform. Refrigerate after use. Stable for 3 months.

2. Stock 1,000 mg/l Ammonia Nitrogen Quality Control Sample (QCS) (500 mls)
Ammonium Chloride, Anhydrous, dried at 100°C - 1.9095 grams
NH_4Cl (FW 53.49)
Chloroform CHCl3 (FW 119.38) - 1 drop
Deionized Water
Prepare as above with stock 1,000 mg/l Ammonia Nitrogen Standard.

3. Intermediate Calibrant Standard 100 mg/l (200 mls)
Stock Calibrant 1,000 mg/l - 20.0 ml
Deionized Water
Use a volumetric pipet to add 20 ml of stock calibrant to approximately 160 ml of deionized water contained in a 200 ml volumetric flask. Dilute the solution to 200 ml with deionized water and mix well. Prepare the intermediate calibrant fresh monthly.

4. Intermediate QCS 100 mg/l NH_3 (100 mls)
Stock QCS 1,000 mg/l - 10 mls
Deionized Water
Use a volumetric pipet to add 10 mls of Stock QCS to approximately 80 mls of deionized water contained in a 100 ml volumetric flask. Dilute to 100 mls with deionized water and mix well. Prepare fresh monthly.

5. Working Calibrants: 0.05-10 mg/l NH3: Prepare fresh daily.

NOTE: **To make standards in same matrix as samples, add 0.8 ml of (1+3) sulfuric acid per 100 mls before diluting to volume.**

NOTE: **To prepare the lower dilutions, you will need to prepare separate dilutions of the 10 standard and the 4.0 STD-QCS intermediate standards without any acid added.**

Prepare the calibration standards as follows, diluting all to 100 mls final volume:

Final conc	Conc of calibrant	mls calibrant
20.00	100 Standard	20
10.00	"	10
5.00	"	5
3.00	"	3
2.00	"	2
1.00	10 Standard	10
0.50	"	5
0.30	"	3
0.20	"	2
5.00 IPC	100 Standard	5
0.50 IPC	10 Standard	5
4.00 QCS	100 QCS	4
0.80 QCS	4 QCS	20

For 0 or blank make volumetrically using 1.6 mls of (1+3) sulfuric acid diluted to 200 mls with deionized water. (Our present deionized water system contains a small amount of organic nitrogen, which will show up in TKN analysis. See TKN SOP for making calibrants for digesting.)

OPERATING PROCEDURE:

NOTE: For computer setup, see SOP for Alpkem Flow Solution Computer Operation.

1. Set up the cartridge as shown in the flow diagram, Attachment A.

2. If switching over from the TKN test, remove the 1/4-28 plug from port #6 and replace with the orn/wht pump tube. Also, remove the grn/grn pump tube from port #1 and replace with the wht/wht pump tube that is necessary for ammonia.

3. Turn power on to all units. Select a temperature of 50°C for the heater unit to be used. Begin pump flow. Run Brij-35 water start-up solution through the system for five minutes. Obtain a stable baseline with all reagents and with wash solution pumping through the sample line from the wash reservoir. Select the detector parameters appropriate for ammonia in the range of interest.

4. Load the sampler tray with calibrants, blanks, samples and QC samples.

5. Select the appropriate parameters for the computer, detector and sampler (see Parameter Table at end of SOP).

6. Begin analysis.

OPERATING NOTES:

1. Prepare ammonia-free water by passing distilled water through a mixture of strongly acidic cation and strongly basic anion exchange resins. This lab has not needed to prepare ammonia free water if fresh deionized water is used.

2. To prevent ammonia contamination from the air, segment the analytical stream with nitrogen draw air through a 5N sulfuric acid solution or cover tray of samples and all reagents with Saran wrap. Tape Saran wrap onto sample tray. Saran wrap is the option this lab uses.

3. If the samples are preserved with acid, add extra sodium hydroxide to the complexing reagent to neutralize. Verify that the added sodium hydroxide will result in a normality equal to that of the acid in the preserved samples. Also use the same normality acid to make the standards and the sampler wash water.
NOTE: This adjustment isn't necessary if wash water is <u>not</u> acidified.

4. Precipitation following the addition of alkaline phenol may indicate poor reagent quality or too much Brij-35. Change the source of EDTA if necessary.

5. Precipitation following the addition of alkaline phenol may also occur if the samples being determined contain calcium and/or magnesium in amounts that exceed the capacity of the complexing EDTA. In such cases, increasing the amount of EDTA should alleviate the problem.

6. Clean precipitates from the system by pumping 10% v/v HCl, with Brij-35 added, through the sample line and all reagent lines. Wash the system thoroughly with Brij-35 water before proceeding with analysis.

7. The pH of the liquid coming out of the flow cell is approximately 11.

8. Do not prepare sample table, reagents or standards if samples are being neutralized for nitrate analysis. The ammonium hydroxide fumes will contaminate the solutions.

9. Store phenol away from nitrate reagents.

QUALITY CONTROL

1. Calibrate the instrument with each use. A minimum of three standards and a blank shall be used. The linear calibration correlation coefficient acceptance criteria is 0.995 or greater.

2. The calibration shall be verified by the analysis of QCS (quality control sample) also know as an ICV (initial calibration verification). The QCS/ICV is prepared from a separate source than the standards. The acceptance limits are 90-110%. If the QCS/ICV is not within these limits the source of the problem must be identified and corrected before analysis of samples may begin.

3. The calibration is verified throughout the run by the analysis of an IPC (instrument performance check) also know as a CCV (continuing calibration verification). The IPC/CCV is prepared from the same stock solution as the calibration standards but diluted separately from the calibration standards. The IPC/CCV concentration should be at the mid point of the calibration curve. The IPC/CCV is to be analyzed at the beginning of the run, after every 10 samples, and at the end of the run. The acceptance limits are 90-110%. If an IPC/CCV is not within acceptance limits, reanalyze all samples following the last acceptable IPC.

4. A calibration blank (CB) shall be analyzed after every IPC. The CB acceptance limits are as follows; SDWA - if the concentration is less than the MDL, CWA/NPDES – if the concentration is less than the RL.

5. A LRB (laboratory reagent blank) shall be analyzed once per batch of up to 20 samples. The LRB acceptance limits are as follows; SDWA - if the concentration

is less than the MDL, CWA/NPDES – if the concentration is less than the RL.

6. A LFB (laboratory fortified blank) shall be analyzed once per batch of up to 20 samples. The LFB is prepared from the same source as the calibration standards. The LFB control limits are as follows; SDWA – 93-110%, CWA/NPDES – 93-110%. (NOTE: These control limits are those in place as of the writing of this SOP, refer to Northern's "Quality Control Acceptance Criteria" for the most current limits). If the LFB is not within these limits the source of the problem must be identified and corrected before analysis of samples may begin.

7. A LFM (laboratory fortified matrix) also known as a MS (matrix spike) shall be analyzed at a rate of 10%, once every ten samples or once per batch, whichever is more frequent. The LFM/MS should be prepared from the same source and at the same concentration as the LFB. The acceptance limits are as follows; SDWA – 90-110%, CWA/NPDES – 78-122%. (NOTE: These control limits are those in place as of the writing of this SOP, refer to Northern's "Quality Control Acceptance Criteria" for the most current limits). If the recovery of a LFM/MS is not within these limits and the LFB is shown to be in control, the recovery problem is judged to be matrix related and the results may be accepted.

8. A duplicate sample is to be analyzed at a rate of 10%, once every ten samples or once per batch, whichever is more frequent. The duplicate acceptance limits are </= 20% RPD for samples with concentration greater than five times the RL or an absolute value difference of +/- the RL for samples with concentrations less than or equal to five times the RL.

9. It is recommended that a certified laboratory control sample obtained from an outside source, such as ERA, be analyzed once per quarter.

REFERENCES

1. Methods for Chemical Analysis of Water and Wastes, March 1984, EPA-600/4-79-020, *"Nitrogen, Ammonia,"* Method 350.1 (Colorimetric, Automated Phenate)

2. Methods for the Determination of Inorganic Substances in Environmental Sample, August 1993, EPA600/R93-100, *"Determination of Ammonia Nitrogen by Semi-Automated Colorimetry"*

3. Alpkem Corporation Enviroflow 3500 Document 000578, 12/93 Rev. D.

Reviewed by: _____ Analyst

_____ Analyst

_____ Quality Assurance Coordinator

_____ Laboratory Manager

DRAFT

Saved: data on gateserverN/typing/sops/ammonia rev02-0403.doc

AMMONIA NITROGEN TABLE, SFA

RANGE	0.05-1.0 mg/l	0.50-10.0 mg/l	
PUMP			
Speed	Percent	60	60
Tubes	EDTA	wht/wht	wht/wht
	Nitrogen gas	orn/yel	orn/yel
	Sample	blk/blk	blk/blk
	Hypochlorite	orn/wht	orn/wht
	Nitroferricyanide	blk/blk	blk/blk
	Pull-off	orn/orn	orn/orn
	Wash	grn/grn	grn/grn
	Alkaline phenol	blk/blk	blk/blk
DETECTOR			
510	Wavelength	660 nm	660 nm
	Rise time	3 sec.	3 sec.
	Range	0.1 AUFS	1.0 AUFS
SAMPLER			
	Rate	48/hour	48/hour
	Sample Time	15 sec.	15 sec.
	Wash time	60 sec.	60 sec.
	Pecking	Off	Off
	Start-up Solution	Brij-35 2 ml/l	Brij-35 2 ml/l
	Wash Solution	DI water	DI water
COMPUTER			
	Input voltage	0 to +1V	0 to +1V
	(for 510)		

AMMONIA NITROGEN

TEST NOTES

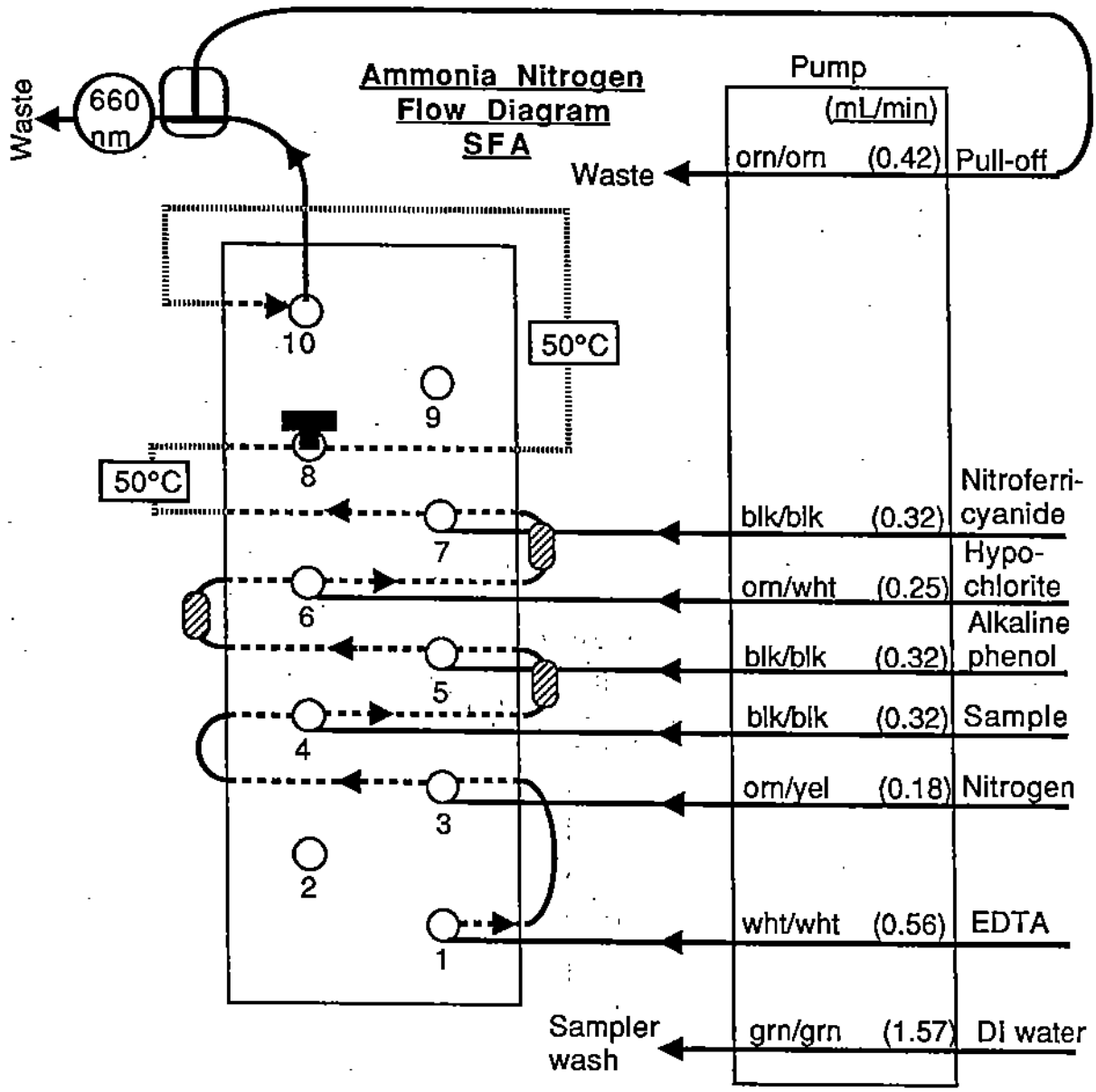
Ammonia Nitrogen
Flow Diagram
SFA
Pump
(mL/min)
Waste
660 nm
Waste
orn/orn (0.42) Pull-off
10
9
8
7
6
5
4
3
2
1
50°C
50°C
blk/blk (0.32) Nitroferri-cyanide
orn/wht (0.25) Hypo-chlorite
blk/blk (0.32) Alkaline phenol
blk/blk (0.32) Sample
orn/yel (0.18) Nitrogen
wht/wht (0.56) EDTA
Sampler wash
grn/grn (1.57) DI water

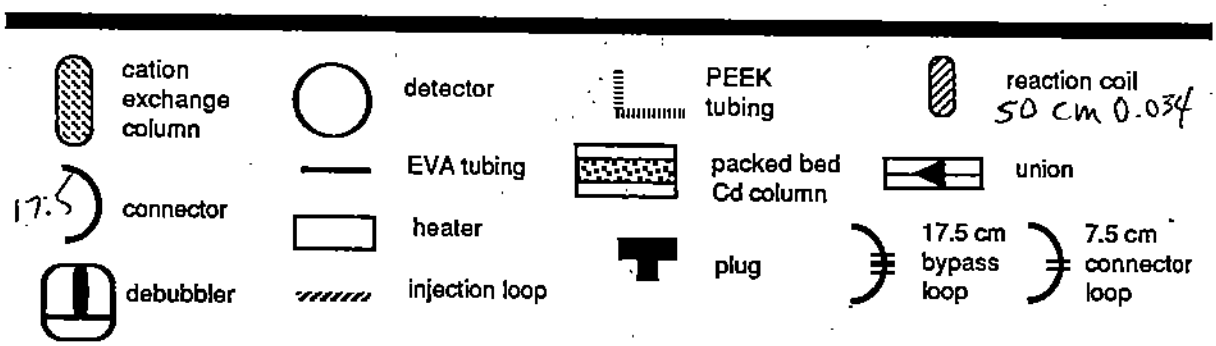
cation exchange column
detector
PEEK tubing
reaction coil
50 cm 0.034
EVA tubing
packed bed Cd column
union
17.5
connector
heater
plug
17.5 cm bypass loop
7.5 cm connector loop
debubbler
injection loop

STANDARD OPERATING PROCEDURE
for
CHLOROPHYLL
Method 10200 H
COLORIMETRIC, MANUAL

DRAFT

SCOPE AND APPLICATION:

This method is used for the determination of chlorophyll in surface water and sediments. The applicable range of this method is 0.1 to 1.0 mg/m3. The range may be extended by changing the cuvette size or by sample dilution.

SUMMARY of METHOD:

Chlorophyll absorbs light at the wavelength 664 nm. Pheophytin absorbs at this wavelength also. Acidification of chlorophyll causes the molecule to lose magnesium from its compound structure to form pheophytin. Pheophytin absorbs light at 665nm. Additional interferences include turbidity.which is measured at 750 mm. Chlorophyll concentration is calculated by subtraction of optical density at the two wavelengths (after correction of each for optical density at 750 nm.), multiplication with an absorbance correction and adjusting for sample and extract volumes.

INTERFERENCES:

Pheophytin and compounds with background absorbance at the analytical wavelength may interfere.

SAMPLE HANDLING AND PRESERVATION:

1. Samples should be collected and transported at 4.°C while being protected from the light. Determine chlorophyll in unpreserved samples of acidic pH immediately after they are collected. Samples of pH 7 or higher should be filtered immediately and the filters stored at 4.°C up to twenty days before analysis.

RAW MATERIALS REQUIRED:

Chemicals should be of ACS grade or equivalent.

1. Hydrochloric acid 0.1N.
2. Water soluble chlorophyll (Pfaltz and Bauer #C18300)
3. Magnesium carbonate, saturated water solution.
4. Deionized Water (ASTM Type I or II)
5. Acetone

EQUIPMENT LIST:

1. Spectrophotometer: suitable for measurements at 664, 665 and 750 nm with a 1.0 cm cell or larger, band width 2.0 nm
2. pH Meter
3. Graduated cylinders; glass, various sizes l
4. Volumetric pipets; glass, various sizes
5. Volumetric flasks; glass, various sizes
6. Vacuum flasks, 1500-2000 mls
7. Small petri dishes or other air tight containers
8. Glass fiber filter paper; Whatman GF/F or equivalent, Gelman AE or equivalent
9. Tissue grinder with round bottom tube and TFE tip (Kontes 8855 or 886000 or equivalent).
10. 10 ml Glass syringe with solvent resistent filter cassettes containing 1.0 um pore size filters (.Gelman Acrodisc or equivalent)
11. Centrifuge (optional)
12. Electric drill or mixer.
13. Centrifuge tubes, glass with caps of 15 ml capacity, use amber if available.

REAGENT PREPARATION:

NOTE: For best results, prepare chlorophyll solutions in subdued light.

1. Stock hydrochloric Acid, 0.1N (2 L)
   - Hydrochloric Acid, concentrated, 12mL
   - Deionized Water

   Cautiously add 8.3 mls of concentrated hydrochloric acid to 992 mls of deionized water contained in a 1.0 liter glass bottle. Store at room temperature and label with a one year expiration date. **Caution, this reaction causes heat. Do not tighten cap until cool as the container may burst.**
2. Stock saturated magnesium carbonate.
   - Magnesium carbonate
   - Deionized Water

   Add 2.0 g of magnesium carbonate to 200 mls of deionized water contained in a 250 ml glass bottle. Store at room temperature. Label with a one year expiration date. The solution should always contain particulate magnesium carbonate so as to maintain complete saturation of the water with the salt.
3. Stock chlorophyll solutions.
   - Chlorophyll pigment
   - Deionized water

   Prepare two separate solutions in the same manner. Add 0.1000 g (or nearly that amount accurately weighed to 4 places past decimal) to 10.0 mls of filtered saturated magnesium carbonate solution. Mix until dissolved and dilute to 100 mls with 90% acetone in a volumetric flask. Use one solution for lab control samples and spiking and one solution for analysis verifications. Prepare dilutions as needed at the instrument with 90% acetone. Store at 4 degrees C with a one month expiration date.

4. Acetone 90% solution.
   Acetone
   Saturated magnesium carbonate solution
   Add 180 ml acetone to 20 ml filtered, saturated magnesium carbonate solution. Store in a glass container at 4 degrees C. Label with a one month expiration date as the acetone will readily evaporate.

FILTRATION AND PREPARATION OF SAMPLE

1. Measure the pH of samples to be tested immediatley upon arrival at the lab. Process samples of pH 6.9 or less immediately through the colorimetric procedure. Samples of pH 7.0 or greater must be immediately filtered but can be held for 20 days before the colorimetric procedure is performed.
2. Measure 800 to 1000 mls (or appropriate portion) to the nearest ml of well mixed sample and filter through glass fiber paper (Whatman GF/F) into a clean collection flask. For sediments, use 0.1 to 10 grams based on color and consistency. Wash all particulates through the filter with small amounts of deionized water. Work quickly in subdued light as chlorophyll pigment is destroyed with excessive light exposure. Immediately place the filter in an air tight petri dish or other air tight container in a light tight box in a refrigerator at 4 degrees C. Process all samples to this point in the procedure.
3. Place the sample on its filter in the grinding tube of a tissue grinder. Add 2 to 3 ml of 90% acetone solution. Macerate the filter with a TFE tip using an electric drill at low speed, approximately 500 rpm for one minute. Be cautious so as not to lose filter or sample sediment. Work in subdued light.
4. Transfer the entire macerated sample to an amber centrifuge tube. Wash the tissue grinder with several milliliters of 90% acetone. Adjust the volume of the sample to a constant volume of 10.0 ml, (use 5 ml if sample is extremely clean) avoiding excess solvent dilution and light. Steep the samples in the dark at 4degrees centigrade for 2 hours.
5. Filter the sample through a solvent resistant filter and force 1 to 2 ml of air through the filter to extract all the extract from the filter. Alternatively, centrifuge the sample for 20 minutes at 500 g. Decant the solution into a clean, calibrated and labeled 15 ml centrifuge tube and measure the total volume using the markings on the tube. This volume is used in the calculation as the extract volume.

DETERMINATION OF CHLOROPHYLL

1. Transfer 3 ml of the clarified sample extract to a 1 cm cuvette and read the optical density at 750nm and 664 nm. Acidify the extract with 0.1 ml of 0.1 N HCL. Gently agitate the extract and read the optical density at 750 nm and 665 nm within 90 seconds of acidification. Optimum measurements are made using solutions that result in optical densities of 0.1 to 1.0.
2. If optical density was above the optimal range, repeat step 1 with a smaller amount of extract diluted to 3 ml to achieve an optical density of 0.1 to 1.0 on the spectrophotometer. Repeat step 1 with a larger sample volume and larger cuvette if the optical density was less than 0.1.

3. Prepare duplicate laboratory control samples by serially diluting the stock chlorophyll solution by a factor of 10 and then 100 (1000 mg/liter to 1.000 mg/liter) using an appropriate amount of stock chlorophyll solution into 90% acetone. (1.0 ml stock to 10 ml; then 1.0 ml to 100 ml) Use 50 ul of the diluted control in 10 ml 90% acetone for a 5.0 ug/l or mg/m3 LCS at the instrument. Read optical density as in step 1.
4. Prepare one duplicate and one spiked sample per ten samples or less but at least one duplicate and one spike per batch. Select the spiking concentration based on the sample.

CALCULATIONS:

1. Chlorophyll a in water – mg/l C = [A*(B-C)*D]/(V*L)
   Where: A = 26.7 the absorbance correction from the published method.
   B = Optical dens. at 664b (before acidification) corrected for optical dens. at 750 nm
   C = Optical dens. at 665a (after acidification) corrected for optical density at 750 nm
   D = Volume of the extract in liters
   V = Volume of the sample in m3
   L = Light path in cm
   Meters3 is equal to 1000 liters

QUALITY CONTROL:

1. The measurements shall be verified by the analysis of LCSs (lab control samples) before and after each set of ten samples. The acceptance limits are 70-130%. If the LCS is not within these limits the source of the problem must be identified and corrected before analysis of samples may begin or continue.

2. A LRB (laboratory reagent blank) shall be analyzed once per batch of up to 20 samples. The LRB acceptance limits are as follows;, CWA/NPDES/RCRA – less than the RL.

3. A LFM (laboratory fortified matrix) also known as a MS (matrix spike) shall be analyzed at a rate of 10%, once every ten samples or once per batch, whichever is more frequent. The LFM/MS should be prepared from the same source and at a concentration based on the sample. The acceptance limits are as follows; CWA/NPDES – 70-130%. (NOTE: These control limits are those in place as of the writing of this SOP, refer to the QA manual for the most current limits). If the recovery of a LFM/MS is not within these limits and the LCS is shown to be in control, the recovery problem is judged to be matrix related and the results may be accepted.

4. A duplicate sample is to be analyzed at a rate of 10%, once every ten samples or once per batch, whichever is more frequent. The duplicate acceptance limits are</= 20% RPD for samples with concentration greater than five times the RL or an absolute value difference equal to or less than the RL for samples with concentrations less than or equal to five times the RL.

REFERENCES:

1. Standard Methods for the Examination of Water and Wastewater, 18th Edition, 1992, American Public Health Association, Washington, D.C. Method 4500-P.

APPROVAL:

Reviewed by: _____ Analyst

_____ Quality Assurance Coordinator

_____ Laboratory Manager

DRAFT

TEST NOTES

Revision: 03-0201

STANDARD OPERATING PROCEDURE
for

NITRATE + NITRITE NITROGEN, NITRATE NITROGEN
and
NITRITE NITROGEN
METHOD 353.2[2,5] COLORIMETRIC, AUTOMATED, CADMIUM REDUCTION

SCOPE AND APPLICATION:

This method is used for the determination of nitrate, nitrite or nitrate plus nitrite in drinking, surface and saline waters, domestic and industrial wastes. The range of this method is 0.05 to 20 mg/l nitrate + nitrite and nitrite nitrogen. The range may be extended by changing the sensitivity of the detector or by sample dilution.

SUMMARY OF METHOD:

Nitrate is reduced quantitatively to nitrite by cadmium metal in the form of open tubular cadmium reactor. The nitrite thus formed plus any originally present in the sample is determined as an azo dye at 520 nm (or 540 nm if analyzing samples for Clean Water Act compliance) following its diazotization with sulfanilamide and subsequent coupling with N-1-naphthylethylenediamine dihydrochloride. Without the introduction of the sample to the cadmium column, nitrite singly is determined. Nitrate is determined by difference.

INTERFERENCES:

Pre-filter turbid samples prior to analysis. EDTA is added to eliminate interference from iron, copper or other metals. Adjust samples to pH 5 to 9 with either concentrated HCl or NaOH. Samples containing large concentrations of oil and grease must be extracted with an organic solvent. Samples containing sulfide cannot be determined by this method without first removing the sulfide by precipitation with cadmium salts.

SAMPLING AND HANDLING:

Analyze nitrite samples as soon as possible (48 hours or less from collection). These samples require refrigeration at 4° C. Samples for nitrate + nitrite are preserved with sulfuric acid to a pH <2.0 and refrigeration at 4°C. Holding time for nitrate + nitrite is 28 days. Nitrite must be determined within 48 hours, do not preserve with sulfuric acid.

APPARATUS:

1. Model 3590 Alpkem Flow Solution/Astoria Pacific sampler & software
2. 311 xyz sampler
3. 502A pump
4. 503 Cartridge heater
5. 509 Power distribution module
6. 510 Monochromator detector
7. Dell computer with FASPac 1.34 software
8. pH meter
9. Magnetic stirrer
10. Filter paper, Whatman #1 or #5, or equivalent

REAGENT PREPARATION:

NOTE: For best results, filter all reagents prior to use.

1. Stock Ammonium Chloride-EDTA Buffer, pH 8.5 (4L)

Ammonium Chloride NH_4Cl	340 g
Ethylenediaminetetraacetic Acid Disodium Salt Dihydrate $C_{10}H_{14}N_2Na_2O_8*2H_2O$	0.4 g
Ammonium Hydroxide, concentrated NH_4OH	to pH 8.5
Deionized water	
Brij	2 ml

Dissolve 340 g of ammonium chloride and 0.4 g of disodium EDTA in 3600 ml of deionized water contained in a 4L Erlenmeyer flask. Adjust the pH to 8.5 with concentrated ammonium hydroxide. Dilute to 4000 ml with deionized water. Pour into reagent bottle and add 2ml Brij. Label with reagent log number, preparation date, and expiration date. Store in cupboard. The reagent shelf life is 1 year.

2. Color Reagent (1L)

Phosphoric Acid, concentrated	100 ml
Sulfanilamide $C_6H_8N_2O_2S$	40 g
N-1-naphthylethylenediamine $C_{12}H_{14}N_{22}HCl$	2 g
Deionized water	

In a hood, cautiously add 100 ml of concentrated phosphoric acid to 800 ml of deionized water (while stirring) contained in a 1000 ml Erlenmeyer flask. Dissolve 40 g of sulfanilamide and 2g N-l-naphthylethylene-diamine dihydrochloride in the phosphoric acid solution. Dilute to 1000 ml with deionized water. Label with reagent log number, preparation date, and expiration date. Store in an amber bottle and keep in the dark when not in use. Reagent is stable for several months.

3. Sampler Wash
Deionized water

4. Copper Sulfate Solution, 2% (1 L)

Copper Sulfate	20 g
$CuSO_4*5H_2O$	
Deionized water	

Dissolve 20 g of copper sulfate in approximately 900 ml of deionized water contained in a 1 L Erlenmeyer flask. Dilute the solution to 1000 ml with deionized water and mix well. Label with reagent log number, preparation date, and expiration date. Store in cupboard. The reagent shelf life is 5 years.

5. Start up solution

Brij 30%	2 ml
Deionized water	1 liter

Add 2 mls of 30% Brij solution to 1 liter deionized water and mix gently.

6. Granulated cadmium: 40-60 mesh. Other sizes may be used.

6.1 Preparation of Cadmium reduction column.

1. Add a small amount of cadmium(enough to fill column) to a 100 ml solo cup. Wash the cadmium with 10% HCl, decant and rinse with distilled water. Decant. The color of the cadmium should be silver.
2. Add about 50 mls of 2% solution of copper sulfate and swirl for 5 min or until blue color partially fades, decant and repeat with fresh copper sulfate until a brown colloidal precipitate forms. Decant.
3. Wash the copper-cadmium with distilled water and decant several times to remove all the precipitated copper. The color of the cadmium should be black. Cover with water.
4. Fill reduction column (see NOTE) with distilled water and plug end with glass wool. Scoop washed copper-cadmium into column from open end until column is full of copper-cadmium. Flush column with Ammonium chloride/EDTA buffer. After system is stable, insert column with glass wool plug at the end of the flow, being careful not to introduce air bubbles.
   NOTE: Differing tube configurations are allowed as long as the column efficiency is checked by analyzing a nitrite standard.
5. The column does not need to be prepared from scratch every time. If the color is still dark gray and there is no sediment the column may be reconditioned instead. Do this as follows:
   Using a 10 ml syringe, flush column with distilled water, then with 2% copper sulfate. Let column set about 20 minutes (or more) with copper sulfate solution in it. Just before inserting column, flush with distilled water and immediately with ammonium chloride/buffer.

7. Sodium Hydroxide – various dilutions, start with 10 N NaOH and make various dilutions. The dilutions do not need to be precise. If stronger NaOH is needed, add NaOH pellets to an aliquot of 10 N NaOH.

CALIBRANTS:

1. Stock 1000 mg/l Nitrate Nitrogen (500 ml)

Potassium Nitrate, $KN0_3$ dried at 110° C (ACS Reagent or primary standard grade)	3.609 g
Chloroform ($CHCl_3$)	1 ml
Deionized water	

Dissolve 3.609 g of potassium nitrate in approximately 450 ml of deionized water contained in a 500 ml volumetric flask. Dilute the solution to 500 with deionized water. Preserve the stock calibrant with 1 ml of chloroform. Label with standard log number, preparation date and expiration date. Store at 2-6° C. Stable for 6 months.

2. Stock 1000 mg/l Nitrite Nitrogen (500 ml)

Potassium Nitrite ($KN0_2$) (ACS Reagent or primary standard grade)	3.036
or Sodium Nitrite ($Na\ NO_2$) (ACS Reagent or Primary standard grade)	2.463
Chloroform	1 ml
Deionized water	

Dissolve 3.036 g of dry potassium nitrite or 2.463 g of dry sodium nitrite in approximately 450 ml of deionized water contained in a 500 ml volumetric flask. Dilute the solution to 500 ml with deionized water. Preserve the stock calibrant with 1 ml of chloroform. Label with standard log number preparation date and expiration date. Store at 2-6 degrees C. Prepare monthly.

3. Intermediate Calibrant 100 mg/l

Use a volumetric pipet to add 10 ml of Stock calibrant to approximately 80 ml of deionized water contained in a 100 ml volumetric flask. Dilute the solution to 100 ml with deionized water and mix well. Label with standard log number, preparation date and expiration date. Store at 2-6 degrees C. Nitrate calibrant stable for 6 months. Prepare nitrite calibrant monthly.

4. Working Calibrants (100 ml)

Working calibrants may be prepared to cover the desired range by adding the appropriate amounts of intermediate calibrant to 100 ml volumetric flasks that contain approximately 80 ml of deionized water. Dilute the solutions to 100 ml with deionized water. Prepare nitrate calibrants weekly. Prepare nitrite calibrants daily. Label with preparation date and standard log number. Store nitrate standards at 2-6 degrees C.

Calibrant Concentration mg/l	Preparation to 100 ml volume
10.0	10 ml of 100 mg/l
5.0	5ml of 100 mg/l
3.0	3ml of 100 mg/l
1.0	10 ml of 10 mg/l
0.5	5 ml of 10 mg/l
0.3	3 ml of 10 mg/l
0.1	10 ml of 1 mg/l
0.005	5 ml of 1 mg/l

PROCEDURE:

1. Set up the cartridge as shown in the SFA flow diagram. Do not install the cadmium column at this time .

2. Turn power on to all units. Allow the startup solution to flow through the system until a stable baseline is achieved. After the baseline has stabilized, start the reagents through the system. If nitrate + nitrite nitrogen is to be determined, connect the cadmium column between parts #1 and #10. If nitrite nitrogen is to be determined do not attach the cadmium column.

3. For computer setup see SOP for FASPac Flow Analyzer Software computer operation.

4. Select the appropriate parameters for the computer, detector, and sample:

Range		0.05-10.0 mg/l
Pump speed		50%
Tubes	buffer	yellow/blue
	nitrogen	orange/yellow
	sample	orange/white
	color reagent	orange/yellow
	pull-off	black/black
	sampler wash	green/green
	air	black/black
Detector-wavelength		520 nm (all samples except Clean Water Act compliance samples)
	Rise time	3 sec
	Range	0.2 Aufs 0.05 – 1.0 2.0 Aufs 0.50-10.0
Sampler	Rate	90/hr
	Sample time	15 sec
	Wash time	45 sec
	Pecking	off
	Startup solu	Brig water
	Wash solu	DI water
Computer	input voltage	0 to 1 volt

5. Neutralize preserved samples to a pH of 5-9 with various concentrations of sodium hydroxide solution. Turbid samples should be filtered through a Whatman #1 or #5 (or equivalent) filter. Be careful to limit the amount of change to the sample volume in this step to prevent diluting the sample.

6. Load the sampler tray with calibrants, blanks, samples and QC samples.

7. To begin sampling and data collection select RUN on the computer. When sampling and data collection is complete press END to stop data collection.

8. Print out a calculated report and peak chart.

QUALITY CONTROL

1. Calibrate the instrument with each use. A minimum of three standards and a blank shall be used. The linear calibration correlation coefficient acceptance criteria is 0.995 or greater.

2. The calibration shall be verified by the analysis of QCS (quality control sample) also know as an ICV (initial calibration verification). The QCS/ICV is prepared from a separate source than the standards. The acceptance limits are 90-110%. If the QCS/ICV is not within these limits the source of the problem must be identified and corrected before analysis of samples may begin.

3. The calibration is verified throughout the run by the analysis of an IPC (instrument performance check) also know as a CCV (continuing calibration verification). The IPC/CCV is prepared from the same stock solution as the calibration standards but diluted separately from the calibration standards. The IPC/CCV concentration should be at the mid point of the calibration curve. The IPC/CCV is to be analyzed at the beginning of the run, after every 10 samples, and at the end of the run. The acceptance limits are 90-110%. If an IPC/CCV is not within acceptance limits, reanalyze all samples following the last acceptable IPC.

4. A calibration blank (CB) shall be analyzed after every IPC. The CB acceptance limits are as follows; SDWA - if the concentration is less than the MDL, CWA/NPDES – if the concentration is less than the RL.

5. A LRB (laboratory reagent blank) shall be analyzed once per batch of up to 20 samples. The LRB acceptance limits are as follows; SDWA - if the concentration is less than the MDL, CWA/NPDES – if the concentration is less than the RL.

6. A LFB (laboratory fortified blank) shall be analyzed once per batch of up to 20 samples. The LFB is prepared from the same source as the calibration standards. The LFB control limits are as follows; SDWA – 90-110% for both nitrate + nitrite and nitrite, CWA/NPDES – 89-113% for nitrate + nitrite and 95-109% for nitrite. (NOTE: These control limits are those in place as of the writing of this SOP, refer to the QA manual for the most current limits). If the LFB is not within these limits the source of the problem must be identified and corrected before analysis of samples may begin.

7. A LFM (laboratory fortified matrix) also known as a MS (matrix spike) shall be analyzed at a rate of 10%, once every ten samples or once per batch, whichever is more frequent. The LFM/MS should be prepared from the same source and at the same concentration as the LFB. The acceptance limits are as follows; SDWA – 90-110% for both nitrate + nitrite and nitrite, CWA/NPDES – 89-113% for nitrate + nitrite and 95-109% for nitrite. (NOTE: These control limits are those in place as of the writing of this SOP, refer to the QA manual for the most current limits). If the recovery of a LFM/MS is not within these limits and the LFB is shown to be in control, the recovery problem is judged to be matrix related and the results may be accepted.

8. A duplicate sample is to be analyzed at a rate of 10%, once every ten samples or once per batch, whichever is more frequent. The duplicate acceptance limits are </= 20% RPD for samples with concentration greater than five times the RL or an absolute value difference of +/- the RL for samples with concentrations less than or equal to five times the RL.

9. It is recommended that a certified laboratory control sample obtained from an outside source, such as ERA, be analyzed once per month.

REFERENCES:

1. Alpkem Flow Solution Methodology

2. *"Methods for the Determination of Inorganic Substances in Environmental Samples"*, EPA/600/R-93-100, Method 353.2, Revision 2.0, August 1993.

3. "FASPac Flow Analyzer Software Package", User's Manual, version 1.34

4. "Astoria Analyzer Sample 311, Rack Model Operation Manual.

5. *"Methods for Chemical Analysis of Water and Wastes"*. EPA 600/4-79-020, March 1984.

REVIEWED BY:

Carol Corder 3/19/01 Analyst

Horst Bettats 3/20/01 Analyst

Denise [illegible] 3/19/01 Quality Assurance Coordinator

[illegible] 3/20/01 Laboratory Manager

NITRATE+NITRITE TEST NOTES

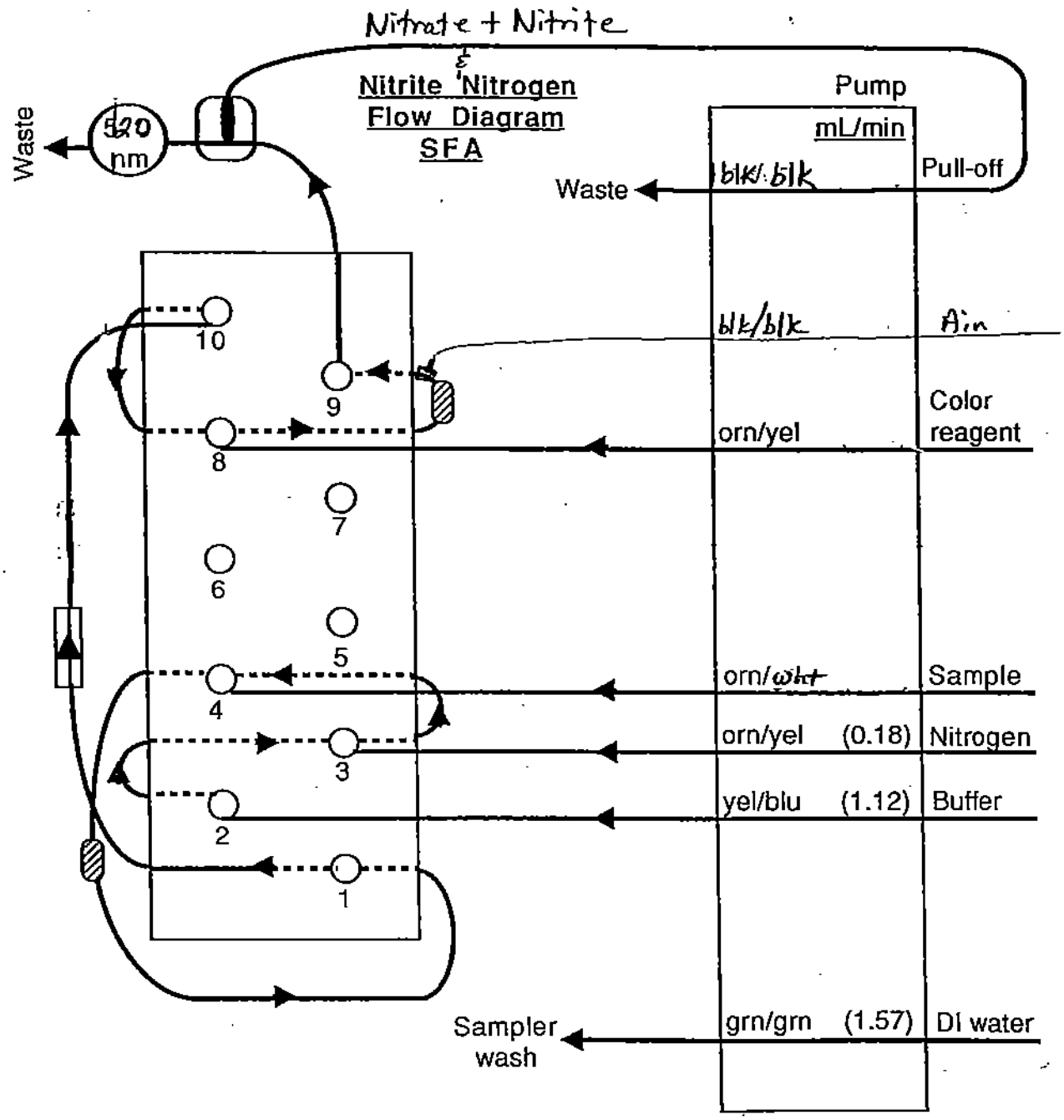
Nitrate + Nitrite
Nitrite Nitrogen
Flow Diagram
SFA
Pump
mL/min
Waste
520 nm
Waste
blk/blk
Pull-off
blk/blk
Air
10
9
8
7
6
5
4
3
2
1
orn/yel
Color reagent
orn/wht
Sample
orn/yel (0.18)
Nitrogen
yel/blu (1.12)
Buffer
Sampler wash
grn/grn (1.57)
DI water

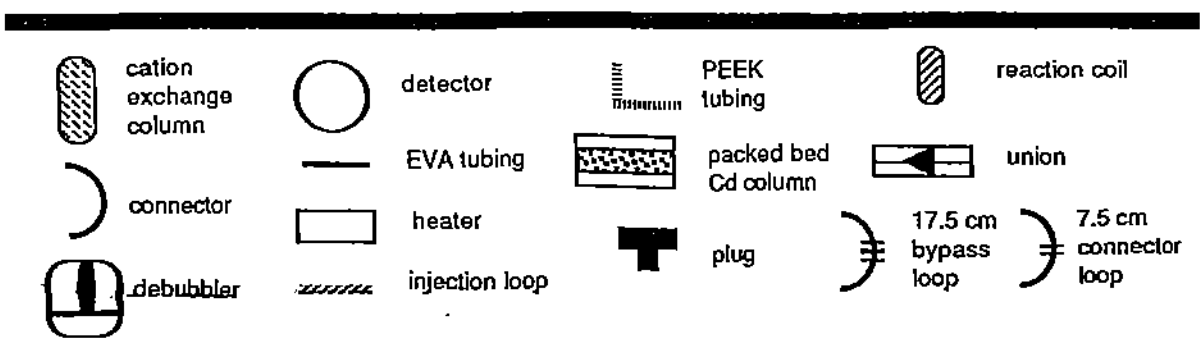
cation exchange column
detector
PEEK tubing
reaction coil
EVA tubing
packed bed Cd column
union
connector
heater
plug
17.5 cm bypass loop
7.5 cm connector loop
debubbler
injection loop

STANDARD OPERATING PROCEDURE
for
PHOSPHOROUS, ORTHO AND TOTAL
Method 365.1[1], 365.1[2],365.2[1]
ASCORBIC ACID, AUTOMATED & MANUAL

SCOPE AND APPLICATION:

This method is used for the determination of orthophosphate and total phosphorous in drinking, surface and saline waters, and domestic and industrial wastes. The applicable range of this method is 0.01 to 1.0 mg/l. The range may be extended by changing the detector sensitivity or by sample dilution.

SUMMARY of METHOD:

Orthophosphate reacts with molybdenum (VI) and antimony (III) in an acid medium to form an antimony-phosphomolybdate complex. This complex is subsequently reduced with ascorbic acid to form a blue color and the absorbance is measured at 660 or 880 nm.

INTERFERENCES:

Ferric iron up to 50 mg/L, copper up to 10 mg/L, and silica up to 10 mg/L do not interfere. Filter or centrifuge (if safe drinking water act) turbid samples prior to analysis. Samples with background absorbance at the analytical wavelength may interfere.

SAMPLE HANDLING AND PRESERVATION:

1. Determine orthophosphate in unpreserved samples immediately after they are collected. Unpreserved samples may be held for 48 hours when cooled immediately and stored at 4°C. Filter or centrifuge (if safe drinking water act) turbid samples prior to analysis.

2. Determine total phosphorous in unpreserved samples immediately after they are collected. Unpreserved samples may be held for 48 hours when cooled immediately and stored at 4°C. Preserve samples by the addition of sulfuric acid to a pH of <2 cooled to 4°C. Holding time for preserved samples is 28 days.

RAW MATERIALS REQUIRED:

Chemicals should be of ACS grade or equivalent.

1. Ammonium Molybdate $(NH_4)_6Mo_7O_{24} \cdot 4H_2O$ (FW 1235.95)
2. Antimony Potassium Tartrate $K(SbO)C_4H_4O_6.1/2H_2O$ (FW 333.94)
3. Ascorbic Acid $C_6H_8O_6$ (FW 176.13)
4. Deionized Water (ASTM Type I or II)
5. Dowfax® 2A1 (Alpkem P/N 000080)
6. Phenolphthalein Indicator

7. Potassium Dihydrogen Phosphate KH_2PO_4 (FW 136.09)
8. Sulfuric Acid, concentrated H_2SO_4 (FW 98.08)

EQUIPMENT LIST:

1. Spectrophotometer: suitable for measurements at 660 or 880 nm with a 1.0 cm cell or larger
   - Model 3590 Alpkem Flow Solution Analyzer
   - 502A pump
   - 503 cartridge heater
   - 509 power distribution module
   - 510 Monochromator detector
2. Astoria Pacific Flow Analyzer
   - Dell computer with FASPac 1.34 software
   - 311 xyz sampler
3. Hot Plate
4. Stir Plate
5. pH Meter
6. Graduated cylinders; 10,25 & 50 ml
7. Volumetric pipets; various sizes
8. Volumetric flasks; 50, 100, & 200 ml
9. Erlenmeyer flasks, 250 mls
10. 100 ml beakers
11. Disposable solo cups; 1 & 2 oz/ with lids
12. Filter paper; MFS 2 & MFS 235 or equivalent
13. Filter funnels

NOTE: All glassware used should be washed with either 10% HCl or 10% H_2SO_4, and rinsed with deionized water. For beakers, rinse down the sides with 10% HCl (approximately 10 mls). Then heat the acid filled beakers on a hot plate until fuming. Cool, empty acid into neutralization bucket, and rinse with deionized water. If the acid in any of the beakers turns yellow, repeat the process. Preferably, this glassware should be used only for the determination of phosphorus.

REAGENT PREPARATION:

NOTE: For best results, filter all reagents prior to use.

1. Dowfax Start-up Solution (1L)
   - Deionized Water
   - Dowfax

   Add 2mL of Dowfax 2A1 to 1,000ml deionized water in a 1000 ml HDPE bottle.

2. Stock Sulfuric Acid, 5N (2 L)
   - Sulfuric Acid, concentrated, 272mL
   - Deionized Water

   Cautiously add 272 mls of concentrated sulfuric acid to 1600 mls of deionized water contained in a 2.5 l acid bottle. Cool to room temperature and dilute to 2,000 mls with deionized water. **Caution, this reaction causes heat. Do not tighten cap until cool, may explode.**

3. Stock Antimony Potassium Tartrate Solution (200ml)
   - Antimony Potassium Tartrate, 0.55g
   - Deionized Water

   Dissolve 0.55 g of antimony potassium tartrate in 200 mls of deionized water contained in a 250 ml amber bottle. Store at 4°C.

4. Combined Color Reagent (200 mls)
   - Stock Antimony Potassium Tartrate Solution, 10 mls
   - Ammonium Molybdate, 1.2 g
   - Ascorbic Acid, 1.4 g
   - Deionized Water

   Add 10 mls of Antimony Potassium Tartrate Solution to 100 mls of deionized water. Add 1.2 g Ammonium Molybdate. Swirl until all dissolved. After Molybdate is dissolved, add the 1.4 g of Ascorbic acid. Mix well and dilute to 200 mls with deionized water. **NOTE:** For manual colorimetric determination may need to double the amount of prepared combined color reagent (400 mls). Need 4 mls per sample cup.

5. Sulfuric acid solution, 1+1 (200 mls)
   - Sulfuric Acid, concentrated, 100 mls
   - Deionized water

   Slowly add 100 mls of sulfuric acid to 100 mls of deionized water.

6. Ammonium Persulfate Solution, 8% (200 mls)
   - Ammonium Persulfate, 16 g
   - Deionized water

   Add 16 g of ammonium persulfate to 200 mls of deionized water and mix.

7. Sulfuric Acid Solution, 1+3 (200 mls)
   - Sulfuric Acid, concentrated, 50 mls
   - Omni Water

   Cautiously add 50 mls of sulfuric acid to 150 mls of Omni water.

8. 1 N Sulfuric Acid (100 mls)
   - Sulfuric Acid, concentrated, 2.8 mls
   - Deionized Water

   Add 2.8 mls approximately 90 mls deionized water then dilute to 100 mls.

9. Sodium Bisulfite Solution
   - Sodium Bisulfite, 5.2 gm
   - 1 N H_2SO_4

   Dissolve 5.2 gms of $NaHSO_3$ in 100 mls of 1.0 N H_2SO_4. Stable for 1 week.

10. 1 N Sodium Hydroxide (1 liter)
    - Sodium Hydroxide pellets
    - Deionized water

    Dissolve 40 gms of NaOH in approximately 600 mls of DI water, cool, dilute to 1 liter.

DIGESTION PROCEDURE FOR TOTAL PHOSPHOROUS:

Water

1. Pour 50 mls of sample (or portion diluted to 50) and laboratory quality controls into acid-washed 100 ml beakers.

2. Add 1 mls of H_2SO_4 solution (5), and 5 mls of ammonium persulfate solution (6) to above beakers.

3. Boil gently on a hot plate for approximately 30-40 minutes or until a final volume of about 20 mls is reached. Do not allow sample to go to dryness.

4. If sample is turbid, filter now through a deionized water washed #2 filter. Rinse filter 2-3 times with deionized water to wash phosphorous out of filter.

5. Just prior to analysis, neutralize the samples to phenolphthalein endpoint with 1 N NaOH (10). Dilute to 50 mls.
   NOTE: Sample may be turbid, don't filter at this point; the reagents used in analysis will clear up sample.

6. Analyze by either manual or automated orthophosphate setup below.

Soil

1. Weigh an aliquot of soil (usually 0.2-1.0 gms) into acid-washed 100 ml beakers. Dilute to approximately 50 mls with deionized water.

2. Continue with steps 2 & 3 above. Filter through deionized water washed # 2 or # 235 filters into 100 ml solo cups. Rinse beakers 2- 3 times with a small amount of deionized water. Rinse filters & soil 2- 3 times with a small amount of deionized water. Dilute samples to 100 mls with deionized water.

3. Pipet a 5 to 20 ml portion of dilution obtained in step 2 into a clean acid-washed 100 ml beaker. Dilute to approximately 30 mls with deionized water. Add 5 mls of sodium bisulfite solution (9) and add 1 mls of H_2SO_4 solution (5) acid to beaker. Continue with steps 3-6 in water digestion.

CALIBRANTS:

1. Stock 1,000 mg/l P (500 mls)
   - Potassium Dihydrogen Phosphate, 2.1965 g
   - Omni Water

   Dissolve 2.1965g of dry potassium dihydrogen phosphate in approximately 450 mls of deionized water contained in a 500 ml volumetric flask. Dilute the solution to 500 mls with deionized water. Mix well. Store at 4 °C. Solution stable for 3 months.

2. Intermediate Calibrant A 100 mg/l P (100 ml)

   Use a volumetric pipet to add 10 mls of Stock Calibrant to approximately 80 mls of deionized water contained in a 100 ml volumetric flask. Dilute the solution to 100 mls with deionized water and mix well. Store at 4°C. Prepare the intermediate calibrant A monthly.

3. Intermediate Calibrant B 10 mg/l P (100mls)

   Pipet 10 mls of Intermediate Calibrant A into approximately 80 mls of deionized water in a 100 ml volumetric flask. Dilute to 100 mls with deionized water. Make weekly and store at 4°C.

4. Working Calibrants 0.005-1.00 P (100 mls)

   Prepare working calibrants from intermediate calibrant B as shown in the following table. Dilute to 100 ml final volume with deionized water. Ortho Phosphate calibrants leave unpreserved. Make weekly. Store at 4°C.
   NOTE: Standards do not need to be digested for Total Phosphorous. See QC section for QC to digest.

Concentration (mg/l)	Calibrant conc.	mls
1.00	10.0	10
0.50	"	5
0.30	"	3
0.20	"	2
0.10	1.0	10
0.05	"	5
0.03	"	3
0.02	"	2
0.01	"	1
0.005	"	0.5

MANUAL COLORIMETRIC PROCEDURE

1. Turn on spectrophotometer. Set wavelength at 660 or 880 nm (usually 880 is preferred). Auto zero. Let warm up for 20- 30 minutes.

2. Label 2 oz solo cups with calibrants, samples, and QC.

3. Measure a 20 ml aliquot of sample, or a portion of the sample diluted to 20 mls, into a 25 ml graduated cylinder. Pour into labeled solo cup.

4. Add 4 mls combined color reagent. Let color develop for at least 10 min. but no more than 30 min.

5. Read and record absorbance of all calibrants, samples, and QC. Rinse the cuvette between samples with 2-3 small portions of the next sample. Using a calculator or computer, plot a linear regression curve of absorbance versus concentration of the calibration standards. Refer to the calculations section.

AUTOMATED COLORIMETRIC PROCEDURE:

1. Set up the cartridge as shown in the flow diagram.

2. Turn on the power to all units. Select a temperature of 37°C for the heater unit to be used. Flush the system with a 1.0N H2SO4 (8) for 5 minutes. Follow this with 1.0 N NaOH (10) for 5 minutes. For consistent results, flush system out every day before use and whenever needed. Begin pump flow with the Dowfax start-up solution (1). Once the heater unit has reached 37°C, verify a stable baseline. Please all reagents on-line. Pump 5 to 10 minutes. Obtain a stable baseline at 660 nm and autozero before the start of sample run.

3. For computer setup see SOP for FASPac Flow Analyzer Software Computer operation.

4. Select the appropriate parameters for the computer, detector and sampler:

Range		0.005-1.0
Pump speed		60%
Tubes	Diluent	orn/orn
	Sample	gry/gry
	Sample pull-off	blk/blk
	Color reagent	orn/wht
	Pull-off	grn/grn
	Air	orn/wht
	Sampler in	ylw/blu
	Sampler out	grn/grn
Detector	Wavelength	660 nm
	Rise Time	3 sec.
	Range (0.005-0.1)	0.01 AUFS
	Range (0.10-1.0)	0.1 AUFS
Sampler	Rate	60/hr
	Sample time	20
	Wash time	60
	Pecking	on
	Start up solution	Dowfax/Deionized water
	Wash solution	Deionized water

Computer Input Voltage (for 510) 0-+1V

Parameters were established to be a guideline and slight variations may be necessary to obtain optimal results.

Detector and computer settings are based on the opaque tan flowcell. If a different flowcell is used, these recommendations will have to be adjusted. Change either the computer setting or the detector range to compensate for the difference in sensitivity.

5. Load the sampler tray with calibrants, blanks, samples and QC samples. **NOTE:** Neutralize any samples with a pH <5.

6. To begin sampling and data collection, select RUN on the computer menu. When sampling and data collection is complete, select END to stop data collection.

7. Print out a calculated report, calibration chart, and graph of peaks.

OPERATING NOTES:

1. Ascorbic Acid Stock Solution - Check color of the ascorbic acid reagent. It should be clear liquid, colorless to light amber in color; a darker color indicates poor reagent quality, or aged solution. Either remake solution or change to new source of ascorbic acid.

2. Instrument Operation

   a. If the baseline is noisy, check:
      1) Color of ascorbic acid stock solution.
      2) Reagents should be filtered prior to use through a 0.45 micron membrane filter.
      3) Detach flowcell from debubbler and flush the flowcell forcefully with surfactant solution and/or methanol.

   b. Frequently occurring air spikes:
      1) Clean system out with 1.0N sodium hydroxide.
      2) Change debubbler pull-off pump tube to next larger size.
      3) Detach flow cell from debubbler and clean the flow cell with surfactant solution.

CALCULATIONS:

1. Total Phosphorous in water – mg/l P = A*(B/C)*D
   Where: A = Phosphorous as P concentration obtained from the linear regression curve.
   B = Final volume of phosphorus digest. (usually 50 mls)
   C = Initial sample aliquot digested.
   D = Dilution factor, if digest was diluted prior to coloring.

2. Ortho Phosphate in water – mg/l P = A*D
   Where: A = Phosphorous as P concentration obtained from the linear regression curve.
   D = Dilution factor, if any.

3. Total Phosphorous in soil – mg/kg P = A*(B/C)*(D/E)*F
   Where: A = Phosphorous as P concentration obtained from the linear regression curve.
   B = Final volume obtained from initial digest step, usually 100 mls. (step 2 in soil digest procedure)
   C = grams of sample digested
   D = Final volume of second digest step, usually 50 mls.
   E = Aliquot of initial digest used in second digestion step, usually 5 to 20 mls)
   F = Dilution factor, if any, applied to digests before coloring

QUALITY CONTROL:

1. Calibrate the instrument with each use. A minimum of three standards and a blank shall be used. The linear calibration correlation coefficient acceptance criteria is 0.995 or greater.

2. The calibration shall be verified by the analysis of QCS (quality control sample) also know as an ICV (initial calibration verification). The QCS/ICV is prepared from a separate source than the standards. The acceptance limits are 90-110%. If the QCS/ICV is not within these limits the source of the problem must be identified and corrected before analysis of samples may begin.

3. The calibration is verified throughout the run by the analysis of an IPC (instrument performance check) also know as a CCV (continuing calibration verification). The IPC/CCV is prepared from the same stock solution as the calibration standards but diluted separately from the calibration standards. The IPC/CCV concentration should be at the mid point of the calibration curve. The IPC/CCV is to be analyzed at the beginning of the run, after every 10 samples, and at the end of the run. The acceptance limits are 90-110%. If an IPC/CCV is not within acceptance limits, reanalyze all samples following the last acceptable IPC.

4. A calibration blank (CB) shall be analyzed after every IPC. The CB acceptance limits are as follows; SDWA - less than the MDL, CWA/NPDES/RCRA – less than the RL.

5. A LRB (laboratory reagent blank) shall be analyzed once per batch of up to 20 samples. The LRB acceptance limits are as follows; SDWA - less than the MDL, CWA/NPDES/RCRA – less than the RL.

6. A LFB (laboratory fortified blank) shall be analyzed once per batch of up to 20 samples. The LFB is prepared from the same source as the calibration standards. The LFB control limits are as follows; SDWA – 90-110%, CWA/NPDES – 81-113% for Orthophosphate. 81-119% for Total Phosphorous. For Total Phosphorus in soil the limits are 80-120%. (NOTE: These control limits are those in place as of the writing of this SOP, refer to the QA manual for the most current limits). If the LFB is not within these limits the source of the problem must be identified and corrected before analysis of samples may begin.

7. A LFM (laboratory fortified matrix) also known as a MS (matrix spike) shall be analyzed at a rate of 10%, once every ten samples or once per batch, whichever is more frequent. The LFM/MS should be prepared from the same source and at the same concentration as the LFB. The acceptance limits are as follows; SDWA – 90-110%, CWA/NPDES – 81-113% for Orthophosphate and 81-119% for Total Phosphorous. For Total Phosphorus in soil the limits are 80-120%. (NOTE: These control limits are those in place as of the writing of this SOP, refer to the QA manual for the most current limits). If the recovery of a LFM/MS is not within these limits and the LFB is shown to be in control, the recovery problem is judged to be matrix related and the results may be accepted.

8. A duplicate sample is to be analyzed at a rate of 10%, once every ten samples or once per batch, whichever is more frequent. The duplicate acceptance limits are</= 20% RPD for samples with concentration greater than five times the RL or an absolute value difference of +/- the RL for samples with concentrations less than or equal to five times the RL.

9. It is recommended that a certified laboratory control sample obtained from an outside source, such as an ERA, be analyzed once per month.

REFERENCES:

1. Methods for Chemical Analysis of Water and Wastewater, March 1984, EPA-600/4-79-020, Method 365.1 "Phosphorous, All Forms (Colorimetric, Automated Ascorbic Acid)" and Method 365.2 "Phosphorous, All Forms (Colorimetric, Ascorbic Acid, Single Reagent)"

2. Methods for the Determination of Inorganic Substances in Environmental Samples, August 1993, EPA/600/R-93/100, Method 365.1 "Determination of Phosphorous by Semi-Automated Colorimetry"

3. Standard Methods for the Examination of Water and Wastewater, 18th Edition, 1992, American Public Health Association, Washington, D.C. Method 4500-P.

4. Alpkem/OI Analytical Enviroflow 3500 Methodology, Doc. 000581, 6/94 Rev. D.

5. "Astoria Analyzer Sampler 311, Rack Model Operation Manual".

6. " FASPac Flow Analyzer Software Package", User's Manual, version 1.34.

APPROVAL:

Reviewed by: _____ Analyst

_____ Analyst

_____ Quality Assurance Coordinator

_____ 6/29/01 Laboratory Manager

Orthophosphate Flow Diagram
SFA

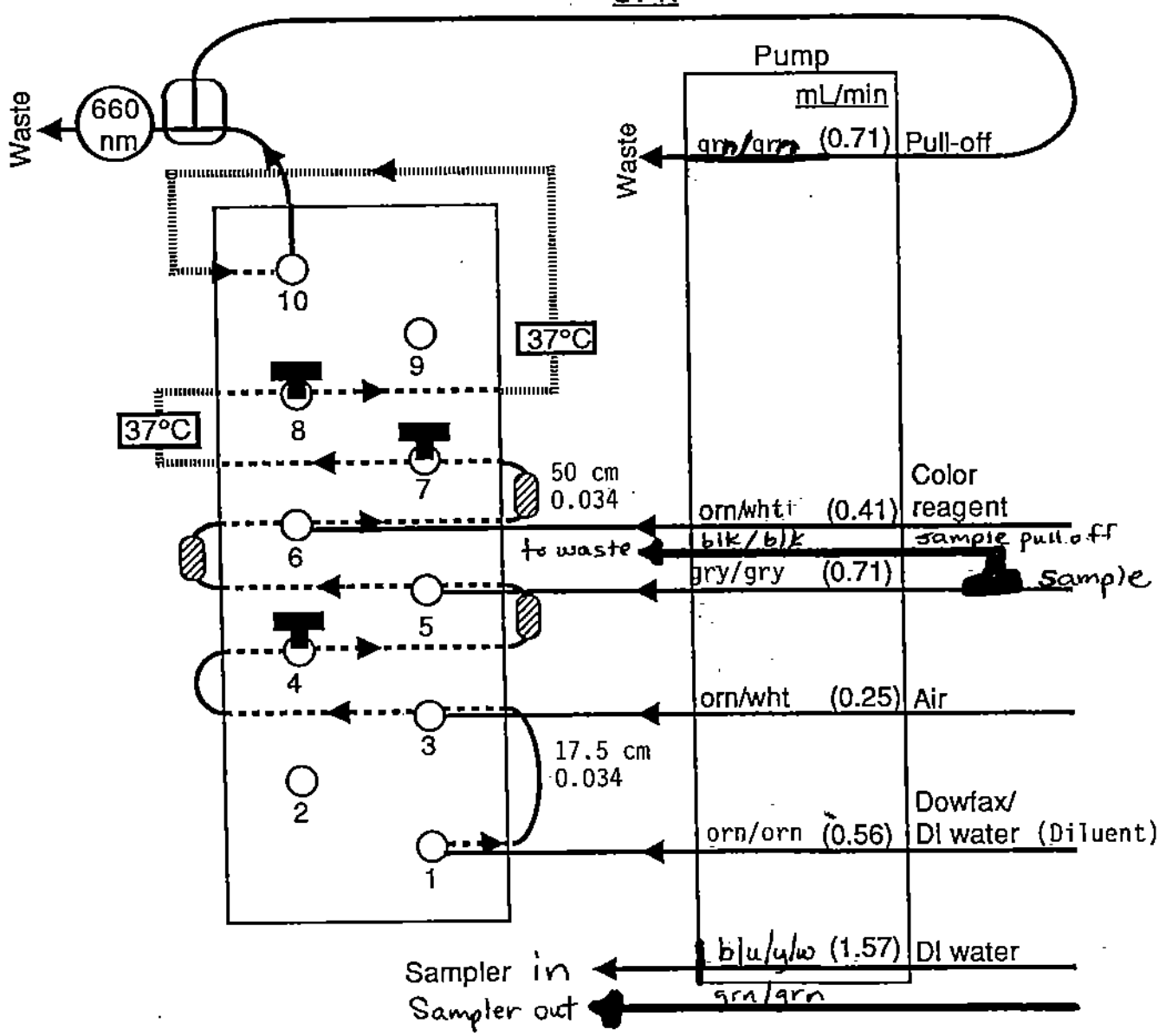

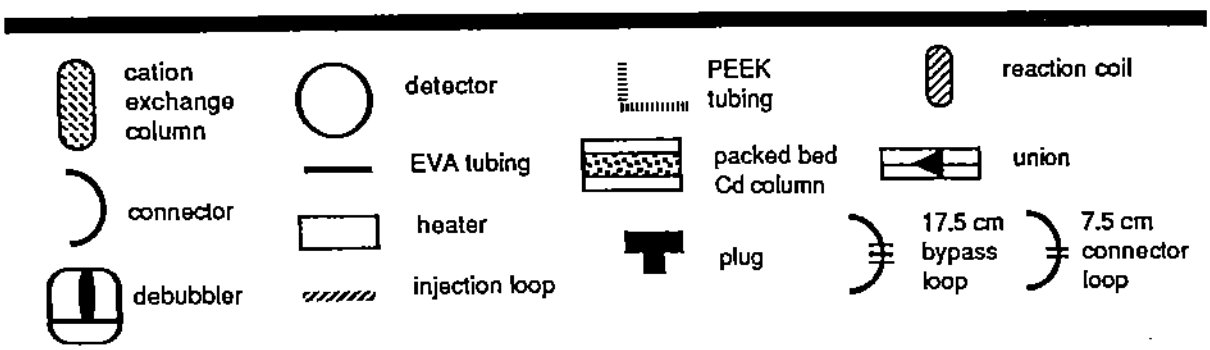

TEST NOTES
TOTAL OR ORTHO PHOSPHOROUS

STANDARD OPERATING PROCEDURE
for
NITROGEN, TOTAL KJELDAHL
METHOD 351.3 Micro Kjeldahl System
METHOD 350.1 Automated Phenate, Colorimetric Analysis

DRAFT

SCOPE AND APPLICATION

This method is used for the determination of Total Kjeldahl Nitrogen in drinking, surface and saline waters, and domestic and industrial wastes. During the digestion, amino acids, proteins, peptides and other nitrogen compounds of biological origin are converted to ammonium sulfate. Nitrogenous compounds of some industrial wastes such as amines, nitro compounds, hydrazones, oximes, semicarbazones and some tertiary amines may not be converted. The applicable range of the method is 0.2-20 mg/l TKN.

SUMMARY of METHOD

The sample is digested prior to analysis by heating in the presence of sulfuric acid, potassium sulfate and mercury catalyst until SO_3 fumes are obtained and the solution becomes colorless or pale yellow. The cooled residue is diluted, and made alkaline with a hydroxide-thiosulfate solution. The ammonia is distilled and determined after distillation by it's reaction with alkaline phenol and hypochlorite to form indophenol blue in an amount that is proportional to the ammonia concentration, The blue color is intensified with sodium nitroferricyanide in order to obtain the sensitivity for measurement of low level nitrogen.

SAMPLE HANDLING AND PRESERVATION

Samples are preserved by the addition of 2 mls of concentrated H_2SO_4 per liter of sample to a pH of <2 S.U. A 100 ml minimum sample volume is required. Samples are refrigerated at 4°C from collection to analysis. The holding time for preserved, undigested samples is 28 days. Samples can be collected and stored in plastic or glass containers.

INTERFERENCES

High nitrate concentrations (10 times or more than the TKN level) result in low TKN values. The reaction between nitrate and ammonia can be prevented by the use of an anion exchange resin (chloride form) to remove the nitrate prior to digestion.

APPARATUS

1. Micro Kjeldahl Digestor
2. Micro Kjeldahl Distillation Apparatus
3. Variac
4. Ring stand and clamps

5. 5 Gallon glass container of **distilled** water.
6. Model3590 Alpkem Flow Solution/Astoria Pacific sampler & software:
   - 311 XYZ Autosampler
   - 502A Pump
   - 503 Cartridge Heater
   - 509 Power Distribution Module
   - 510 Monochromator Detector
   - Dell computer with FaSPac 1.34 software
7. Magnetic Stirrer
8. 25 ml buret with replaceable PTFE stopcock and wide tip as used in drying column for GC work.

REAGENTS

NOTE: Keep all reagents are tightly capped to keep free from ammonia contamination from lab air.

Digestion/Distillation Reagents

1. Anion Exchange Resin Cl^- form, Type II: JTB Ionae A-554.

2. Deionized water **NOTE:** to be used for post-digestion reagents and standards only.

3. Purchased distilled water (usually Albertson A+ or Omni Water is used) **NOTE:** to be used for all digestion reagents and digested standards

4. Sulfuric Acid, concentrated

5. Mercuric Sulfate: Carefully add 10 mls concentrated sulfuric acid to 40 mls ***purchased distilled*** water in a 100 ml volumetric flask. Add 8 grams Red Mercuric Oxide (HgO) and dissolve. Dilute to100ml volume.

6. Digestion Solution: Carefully add 200 mls concentrated sulfuric acid to approximately 700 mls ***purchased distilled*** water. Add 133 grams potassium sulfate (K_2SO_4) and stir to dissolve. Add 25 mls mercuric sulfate solution. Allow to cool, then dilute to 1000 mls with ***purchased distilled*** water. **Caution: this reaction creates heat.**

7. Boric acid: Dissolve 20 grams boric acid (H_3BO_3) in 800 mls ***deionized*** water. Dilute to 1000 mls.

8. Sodium hydroxide-sodium thiosulfate solution: Cautiously dissolve 500 grams NaOH and 25 grams $Na_2S_20_3.5H_20$ in ***purchased distilled*** water while stirring. After solution cools, dilute to 1000 mls. **Caution: this reaction creates heat.**

Analysis Reagents

1. Sodium hydroxide, 10 N: Cautiously add 400 grams NaOH pellets to ***deionized*** water while stirring. After solution cools dilute to 1000 mls. **Caution: This reaction creates heat.**

2. Sodium Hypochlorite Solution: Add equal parts bleach and ***deionized*** water in reagent bottle. Usually 50 mls of each is adequate. If bleach is concentrated (labeled as "ultra" bleach) use 37 mls bleach diluted to 100 mls with ***deionized*** water.

3. Alkaline Phenol: Add 16 mls 10 N NaOH to approximately 150 mls ***deionized*** water in a 250 ml erlenmeyer flask. Add 16.6 grams phenol solid, and dissolve. Dilute to 200 mls with ***deionized*** water. Alternatively, use 6.4 g NaOH pellets in place of 10 N NaOH.

4. EDTA Complexing reagent: Dissolve 64 grams Disodium EDTA ($Na_2C_{10}H_{14}O_8N_2 \cdot 2H_2O$) in approximately 3500 mls ***deionized*** water in a 4 liter flask. Add 24 pellets Sodium Hydroxide (NaOH). Stir until dissolved. Dilute to 4000 mls and filter if necessary. Pour into 4-L omni bottle for storage and add 4 mls brij-35%.

5. Sampler wash solution: use ***deionized*** water unless baseline has negative peaks. Matrix the wash to match digestates. To matrix the wash solution, use 100 mls boric acid solution diluted to 1000 mls with ***deionized*** water.

CALIBRANTS

1. Stock 1000 mg/l Ammonia Nitrogen: Dissolve 2.3584 grams Ammonium Sulfate [$(NH_4)_2SO_4$], dried at 110°C, in approximately 450 mls deionized water in a 500-ml volumetric flask. Dilute the solution to 500 mls with deionized water. Preserve the stock calibrant with 2 drops chloroform and refrigerate. Alternatively, use 1.9095 grams Ammonium Chloride (NH_4Cl), dried at 110°C, and dilute to 500 mls. Stock is good for 3 months. Make one stock solution for standards and another stock solution from another source to be use for calibration verification. The second source standard is the QCS (quality control standard).

2. Intermediate Calibrant (100 mg/1): Pipet 20 mls stock calibrant into a 200 ml volumetric flask. Dilute to volume with deionized water.

3. Intermediate QCS Calibrant (100 mg/l): Pipet 10 mls Stock QCS into a 100-ml volumetric and dilute to volume.

4. Working Calibrants (0.20-20.0 mg/l): Dilute all working calibrants to 100 mls in 100 ml volumetric flasks. Matrix the standards with 10 mls boric acid solution per 100

mls standard. NOTE: Make two each of the 10 mg/l standard and the 4 mg/l QCS. Matrix one and leave one unpreserved for making the lower calibrants. Matrix standards that are digested by adding 0.8 ml of 1+3 sulfuric acid to each volumetric before dilution.

5. Prepare the calibration standards as follows:

Final conc	Conc of calibrant	mls calibrant
20.00	100 Standard	20
10.00	"	10
5.00	"	5
3.00	"	3
2.00	"	2
1.00	10 Standard	10
0.50	"	5
0.30	"	3
0.20	"	2
5.00 IPC	100 Standard	5
0.50 IPC	10 Standard	5
4.00 QCS	100 QCS	4
0.80 QCS	4 QCS	20

DIGESTION

1. For water samples: measure 50 ml of sample or an aliquot of sample diluted to 50 mls into a 100-ml Kjeldahl flask. Add 10 mls of digestion solution and 3-4 Hengar Granules. Evaporate the mixture in the Kjeldahl apparatus until $S0_3$ fumes are given off and the solution turns colorless or pale yellow. Then digest for an additional 30 minutes. Cool the residue and rinse down the sides with ***purchased distilled*** water.

   NOTE: Digest the following quality control (QC) samples with the batch (see the QC section of this SOP for information of QC sample preparation and frequency:
   - Clean out blank - Run one blank ***purchased distilled*** water sample through the entire digestion/distillation process to clean system, discard this blank.
   - Lab Reagent Blank - Be sure to use ***purchased distilled*** water also for the LRB.
   - Lab Fortified Blank – high and/or low concentration
   - Matrix spike
   - Duplicate
   - Soil ERA (for soil batches only)

2. For soil samples: weigh 0.5-1.0 (1.0000) grams of soil into a tared Kjeldahl flask. Record weight. Rinse the soil down into the bottom of the flask; add 10 mls digestion solution and 3-4 Hengar granules. Evaporate the mixture in the Kjeldahl apparatus until $S0_3$ fumes are given off and the solution turns colorless or pale yellow. Then digest for an additional 30 minutes. Cool the residue and rinse down the sides with deionized water.

3. To pretreat high nitrate samples, do the following:
   a) Rinse a small amount of anion exchange resin with ***distilled*** water to remove fines.
   b) Make a slurry with rinsed resin and ***distilled*** water. Pour slurry into a buret to a depth of 1-2 inches. Add 2-3 aliquots of ***distilled*** water, letting drain after each aliquot.
   c) Shake the sample and measure approximately 80-100 mls into a solo cup.
   d) Pour a 15-20 ml portion of sample from solo cup into the prepared resin column, discarding the filtrate.
   e) Pour the rest of sample in solo cup into resin column. Save this filtrate and use an appropriate aliquot for digestion.
   f) Use a fresh slurry of resin for each sample to be pretreated. Repeat above steps.

DISTILLATION

1. Attach the distillation apparatus to a ring stand. A single clamp suffices to hold the apparatus to the ring stand.

2. Attach the hose nipple on the condenser to the water sources. One hose is attached to a tap water source and the other hose is attached to a 5 gallon glass jug containing ***purchased distilled*** water. Before the water is turned on, the double oblique stopcock should be turned so that it directs the flow to the drain tube. A small, steady flow of water is sufficient.

3. Plug the immersion heater cord into a Varian.

4. Add 5 mls of boric acid solution to a 50-ml tall form Nessler tube and attach the Nessler tube to the ring stand with a clamp so that the tip of the condenser tube is under surface of boric acid solution.

5. Pour the cooled and diluted digestate into the funnel at the top, with the stopcock in the open position. Rinse the flask sparingly with ***deionized*** water a couple of times. Slowly add 10 mls of sodium hydroxide-thiosulfate solution to the funnel. Rinse again, sparingly. Close the stopcock and reverse the double oblique stopcock 180°, so that tap water is directed into the steam chamber. Fill this chamber to the halfway mark, the point on the outer bulb of greatest diameter. When filled to the appropriate level, reverse the stopcock to drain once again.

6. Turn the variac on high and bring water rapidly to the boiling point. This takes about 20-30 seconds. Slowly turn the variac down to about 60 or 70. You will have to experiment with something besides a sample the first time to get the feel for this and to not "lose" the sample. Distill until the distillate in the Nessler tube is close to the 50 ml line. Carefully remove the Nessler tube and place in test tube rack. Dilute the

sample to the 50 ml mark on the Nessler tube with ***deionized*** water and pour into a labeled sample cup and seal.

7. After removing the Nessler tube, turn off the variac and quickly reverse the double oblique stopcock. The water will fill the outer chamber, then spill over into the inner distillation chamber. When the inner chamber is filled, again reverse the double oblique stopcock, returning the water flow to drain. Remove the pinch clamp at the bottom and drain the outer chamber. As it drains it will create a vacuum, which in turn will suck out the inner distillation chamber, thereby flushing it. When all the water has drained replace the pinch clamp and repeat the flushing 2 more times using tap water. Remember to rinse the funnel also. Do final rinse with ***purchased distilled*** water. The apparatus is then ready for the next sample.

   NOTE: During the distillation process the heater can't be turned off until a sufficient part or the entire sample has been distilled. Stopping the heater cools the water in the outer jacket, which creates a sufficient vacuum to suck the sample out into the jacket. The sample is then lost.

   NOTE: If the outer jacket happens to boil dry, DO NOT reverse the double oblique stopcock and allow water to run in. This can cause the distillation apparatus to crack. Instead, turn off the variac and let the heating coil and glass cool down for five minutes. Then it will be safe to start another cycle.

DETERMINATION OF AMMONIA IN DISTILLATE

Analyze for TKN per the ammonia nitrogen by phenate method SOP. Calibrate using the matrixed calibrants as described previously. These samples cannot be run concurrently with ammonia samples. A separate run with separate calibrants matrixed for TKNs must be used.

QUALITY CONTROL

1. Calibrate the instrument with each use. A minimum of three standards and a blank shall be used. The linear calibration correlation coefficient acceptance criteria is 0.995 or greater.

2. The calibration shall be verified by the analysis of QCS (quality control sample) also know as an ICV (initial calibration verification). The QCS/ICV is prepared from a separate source than the standards. The acceptance limits are 90-110%. If the QCS/ICV is not within these limits the source of the problem must be identified and corrected before analysis of samples may begin.

3. The calibration is verified throughout the run by the analysis of an IPC (instrument performance check) also know as a CCV (continuing calibration verification). The IPC/CCV is prepared from the same stock solution as the calibration standards but diluted separately from the calibration standards. The IPC/CCV concentration should

be at the mid point of the calibration curve. The IPC/CCV is to be analyzed at the beginning of the run, after every 10 samples, and at the end of the run. The acceptance limits are 90-110%. If an IPC/CCV is not within acceptance limits, reanalyze all samples following the last acceptable IPC.

4. A calibration blank (CB) is to be analyzed after every IPC. The CB acceptance limits are as follows; SDWA - if the concentration is less than the MDL, CWA/NPDES – if the concentration is less than the RL.

5. A LRB (laboratory reagent blank) is to be distilled and analyzed once per batch of up to 20 samples. The LRB acceptance limits are as follows; SDWA - if the concentration is less than the MDL, CWA/NPDES – if the concentration is less than the RL.

6. A LFB (laboratory fortified blank) is to be distilled and analyzed once per batch of up to 20 samples. The LFB is prepared from the same source as the calibration standards. A high concentration or low concentration LFB, or both, is prepared depending on the expected TKN concentration of the samples. Prepare the high conc. LFB by adding 2 mls of 100 mg/l standard to 50 mls deionized water (4 mg/l). Prepare the low conc. LFB by adding 4 mls of 10 mg/l standard to 50 mls deionized water (0.8 mg/l). The LFB control limits are as follows; SDWA – 90-110%, CWA/NPDES – 80-120% (NOTE: These control limits are those in place as of the writing of this SOP, refer to the Northern's "Quality Control Acceptance Criteria" document for the most current limits). If the LFB is not within these limits the source of the problem must be identified and corrected before analysis of samples may begin.

7. A LFM (laboratory fortified matrix), also known as a MS (matrix spike), is to be distilled and analyzed at a rate of 10%, once every ten samples or once per batch, whichever is more frequent. The LFM/MS should be prepared from the same source and at the same concentration as the high or low LFB, depending on the expected sample concentration. The acceptance limits are as follows; SDWA – 90-110%, CWA/NPDES – 80-120%. (NOTE: These control limits are those in place as of the writing of this SOP, refer to the Northern's "Quality Control Acceptance Criteria" document for the most current limits). If the recovery of a LFM/MS is not within these limits and the LFB is shown to be in control, the recovery problem is judged to be matrix related and the results may be accepted.

8. A duplicate sample is to be distilled and analyzed at a rate of 10%, once every ten samples or once per batch, whichever is more frequent. The duplicate acceptance limits are </= 20% RPD for samples with concentration greater than five times the RL or an absolute value difference of +/- the RL for samples with concentrations less than or equal to five times the RL.

9. With each soil batch, digest and distill a soil control purchased from ERA.

10. It is recommended that a certified laboratory control sample obtained from an outside source, such as ERA, be analyzed once per quarter.

REFERENCES

1. Alpkem Flow Solution Methodology

2. "FASPac Flow Analyzer Software Package", User's Manual, version 1.34

3. "Astoria Analyzer Sample 311, Rack Model Operation Manual.

4. EPA/600/4-79-020 *"Methods for Chemical Analysis of Water and Wastes,"* March 1993. Method 351.3 *"Nitrogen, Kjeldahl, Total (Colorimetric, Titrimetric, Potentiometric)*

5. EPA/600/R-93-100 *"Methods for the Determination of Inorganic Substances in Environmental Samples"* Method 351.2 *"Determination of Total Kjeldahl Nitrogen by Semi-Automated Colorimetry"*

6. Perstop Analytical Document, 000578 12/93 Rev. D *"Ammonia Nitrogen."*

7. Alpkem, *"TKN by Phenate"* Document 000712.

8. Operation of Micro-Kjeldahl apparatus #51105-006.

Reviewed by:

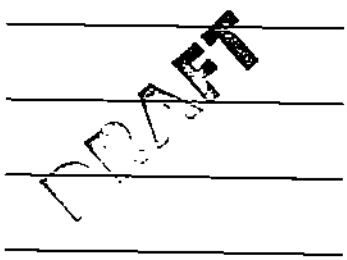

_____ Laboratory Manager

_____ Quality Assurance Coordinator

_____ Inorganics Group Leader

_____ Analyst

NITROGEN, TOTAL KJELDAHL

TEST NOTES

Revision: 02-0103

STANDARD OPERATING PROCEDURE
for
SAMPLE LOG IN

OBJECTIVE:

Samples received in our laboratory are assigned a unique identification number for tracking purposes. We use Visual Labpro software to record the sample descriptions and related information including test results. This procedure describes the steps necessary ,for accomplishing this objective.

SUMMARY OF METHOD:

Samples are uniquely numbered using a lab order and number system, which intrinsically records the month and year the samples were received. These numbers, sample descriptions, client information and test requirements are then recorded in Visual Labpro Sample labels with sample numbers and descriptions are printed and applied to the samples.

SAMPLE HANDLING/PRESERVATION:

As samples are logged in, sample aliquots for particular tests are checked for appropriate preservation techniques. Observations made as to the preservation are recorded on the sample receipt checklist.

EQUIPMENT:

1. Computer workstation attached to the network with Visual Labpro as available software.
2. pH paper
3. Thermometer checked against a NIST certified thermometer.

REAGENTS

1. Preservative aliquots required as specified by the quality assurance manual.
2. STANDARDS: Not applicable.

PROCEDURE:

1. Assemble sample delivery containers (box, coolers, etc.) in the log-in area. Examine the labels for client identifications. Determine which shipments need handled on a

priority basis based on the need to immediately document the sample temperature, because they contain rush samples or contain samples with short holding times.

2. Using the priority list you determined, select the sample container with most immediate need for handling. Record on a sample receipt checklist the information germane to the container before it is opened. (See Attachment A, lines D through H and lines 1 and 2) These items include but are not limited to the delivery system used (UPS, Federal Express, bus, hand, etc.) whether the container was in good condition, if custody seals are present.

3. Open the container and remove any documents contained therein. Observe if ice or frozen blue ice is present in the container and check line 10 on the sample receipt checklist. Determine if a temperature blank is listed on the chain of custody. If one is present, retrieve it from the cooler and measure its temperature immediately using a thermometer as described in "Equipment". If a temperature blank is not present, measure the temperature of the contents of the container by placing the thermometer in the coldest location in the container. Record the temperature under line 10 of the receipt checklist. If the samples do not require cold storage as a preservation technique, record NA (not applicable) on line 10 of the checklist. **Note:** Contact the lab manager if the temperature measurement is above 10° C or below 0° C so the client may be advised as to the validity of their samples.

4. Assemble the contents of the container on the counter in the same order as the samples are listed on the chain of custody. If a chain of custody was not received with the samples, start one by listing the names of all samples received and all other pertinent information on a blank chain of custody or on any correspondence received from the client.

5. Complete the chain of custody record, include any Northern staff who accepted the samples from a non-Northern representative. The staff member must sign and date the chain themselves. If that person is unavailable that day, another Northern staff member can sign and date the chain for the other employee notating with initials their entry. (For instance, "M. Smith by MMM on 06/05/04".) Using the log-in tracking book (see Attachment B), assign an order number to the chain of custody. Complete columns 1 through 6 in the tracking book and lines A, B, C and 3, 4, and 5 on the sample receipt checklist. Number the samples on the chain of custody consecutively. Make a note on the chain of custody (COC) when samples listed on the COC are not received and record on the COC any samples received that are not listed. Contact the lab manager so that the client may be advised of missing samples and to obtain instructions regarding the analysis of samples not listed.

6. Observe and record the items on lines 6 through 9 and 11 through 12 on the sample receipt checklist. If an item is not applicable, mark NA. If headspace is present in a VOA vial, record if the headspace is a bubble or air space and measure and record the diameter of the bubble or length of air space. Mark the VOA vial "Contains Headspace" in red marker. Any "No" check on items 7, 8, 9, 11 or 12 requires an

explanation in the comments section. Contact the lab manager so that the client may be contacted and advised as to the validity of their samples.

7. Record the laboratory numbers on each sample container using a blue or black permanent marker. Alternatively affix lab number labels to each container (see line 13 below). If more than one container is received per sample then fraction codes must also be assigned. Fraction codes are listed in Attachment C. For example if a metals bottle and a common ions bottle were received then the metals bottle would be assigned the fraction code "M" and the common ions fraction code "R". The fraction code is recorded after the lab number (i.e. 2003010116-1 M). If multiple containers of the same fraction are received (i.e. 3 VOA vials) add a number to the fraction code such as V1, V2, V3, etc. Assign quality control sample numbers at this time. Refer to the Quality control section of this SOP for guidelines on assigning QC lab numbers.

8. Check that the samples were properly preserved using wide range pH paper. The pH of the metals, nutrients, cyanide, sulfide, TOC and phenolics are checked at the log in counter. Do not dip the pH paper into the sample container. Pour a small amount of sample into the cap and drip a portion onto the pH paper or dip the pH paper into the cap. Discard the liquid in the cap, do not add it back into the sample container. DO NOT open and check the pH of VOA vials, oil and grease, EPH and semivolatile containers. This check is performed at the time of analysis. Record the pH checks on lines 14 through 20 on the sample receipt checklist. When a sample is found to not be preserved or insufficiently preserved, add additional preservative using the preservative vials stored in the log-in area. **Note:** Be very careful that the correct preservative is added to the correct sample container. Incorrect preservation may destroy the validity of the sample. **Caution:** The preservatives are strong acids and bases. Avoid contact with skin and eyes. Safety glasses must be worn when preserving samples. Add preservative cautiously to avoid violent reactions with the sample. Wash affected areas profusely with water.

9. Using Visual LabPro (VLP), select "Lab Order Entry" in the pull down menu labeled "Activities". Look at the default order number that appears. If the order number is less than the number you need, click on "New Order" (bottom right corner of the screen) to select order numbers until you've reached the number required. If the default order number is greater than the number you need, use "Find Order" (lower left hand corner) or "Previous" (bottom center of screen) to get to the order number needed.

10. Go to "Account Number" and select the applicable account number. Or, using the "Search by" function, select "Client Name", type in the first 3 of 4 letters of the client name and enter. Select the proper client name by clicking in the left hand column. Check the VLP information against the chain of custody. If discrepancies exist, determine if the difference is due to a specific change for this one order from the client or if our client information needs to be changed globally for the client. If a "project" change is needed, change in the Lab Order Entry screen, if a global change

is needed, change in Client Management and contact the file clerk to change the file and the business staff to change QuickBooks. Use written information to provide the new address to the file clerk and business staff with a date and your initials.

11. Go to the tab labeled "Samples" at the top of the screen. Click on "New Sample" and enter all pertinent information related to the first sample on the chain of custody. Enter the lab number as a seven digit number using this format:

ABCDEFG

where:

A equals the tens digit in the month the sample was received. For months January through September, you need to use a placeholder. Use 5 in the year 2003 (6 for 2004, 7 for 2005 etc.) For October through December, use 1

B equals the second digit in the number of the month, for instance April is 04 so enter 4, November is 11 so enter 1.

C equals the "hundreds" place in the order numbers. For instance, in 2002050006, this would be 0. In 2002110126, this number would be 1. DO NOT USE A PLACE HOLDER FOR THE THOUSANDS PLACE IN THE ORDER NUMBER.

D equals the "tens" place in the order number.

E equals the "units" place in the order number.

F equals the "tens" place in the sample number. For instance, in 2002050006-13, this would be 1. For 2002050406-01 this would be 0.

G equals the "units" place in the sample number.

Examples: 2003020112-01 = 5211201 (using the place holder 5 in place of 0 for the month)

2003100220-13 = 1022013

12. Assign tests to the sample by selecting from "Defined Tests", "Global" or "Client" jobs. When you are satisfied that all client information, sample information and tests are entered for the first sample, proceed to the next sample on the chain of custody. Use the options "Duplicate Tests" or "Duplicate Sample Info" (upper left on the "Samples" screen) if applicable.

13. When all samples are entered, print a work order by clicking on that option and selecting NATCOVER for a report format. Print labels by selecting the "Do Label" option. Attach the labels to the samples. Assign fraction codes to containers if more than one container per sample has been received.

14. Contact a qualified staff member to verify the correct sample number has been applied to each sample container as compared to the chain of custody. The verification by the second staff member is documented using initials and date on the chain of custody and in the tracking book.

15. Assemble the original chain of custody, sample receipt checklist and other accompanying documents (transportation documents, purchase order, correspondence) with the work order. Provide a copy of these documents to each

group that will be required to perform tests for the samples in question. Provide a copy of the chain of custody and sample receipt checklist to the business office for invoice preparation.

QUALITY CONTROL:

1. A member of the analytical staff must verify the correct sample number has been applied to the sample on the chain of custody and each sample aliquot. The verification is documented using initials and date on the chain of custody and in the tracking book.

2. Quality control (QC) sample numbers are usually assigned at log-in. Guidelines for the correct QC to be logged in are given below. Consult with the lab manager, a group leader or the quality assurance coordinator for additional guidance on logging in QC samples. Several types of analyses do not require that additional QC be assigned to the order as batch QC numbers have already been assigned. These are VPH, BETX, GRO, EPH, DRO, 8260, 8270, 624, 625, 524.2, 525.2, 508, 504, 515.1, 8081, 8082 and 8151.

   2.1 TCLP – Assign the following QC samples; Extraction Blank, Matrix Spike (one for each type of matrix), Method Blank, Lab Control Sample
   2.2 Waters – Assign; Method Blank, Lab Control Sample, Matrix Spike, Duplicate or Matrix Spike Duplicate. Note: For orders that contain less than five samples a duplicate or matrix spike may be assigned rather than both. Alternate assigning duplicates and spikes.
   2.3 Soils and Oils – Assign; Method Blank, Lab Control Sample, Matrix Spike, Matrix Spike Duplicate or Duplicate. Note: Some projects require an Aqueous Lab Control Sample and a Soil Lab Control Sample in place the Lab Control Sample.
   2.4 Landfill Samples – Assign; Method Blank, Lab Control Sample, Matrix Spike, Matrix Spike Duplicate
   2.5 Lead Soil and Paint – Assign; Method Blank, Lab Control Sample, Matrix Spike, Matrix Spike Duplicate.
   2.6 Lead Air and Wipes – Assign; Method Blank, Lab Control Sample, Lab Control Sample Duplicate
   2.7 Charcoal tubes, Sorbent Tubes, Organic Vapor Monitors - Assign; Method Blank, Lab Control Sample, Lab Control Sample Duplicate

3. A QC batch cannot contain more than 20 samples. If an order contains more than 20 samples assign two or more sets of QC numbers to the order.

4. Generally the sample(s) to undergo duplicate or spike analysis are selected at log-in. Do not select samples that are labeled as a field blank, equipment blank or trip blank. Some clients may specify which samples are to be used for matrix spike analysis. Record the duplicate and matrix spike lab number on the sample container using red permanent marker. For example, if sample 2003010116-1 was

selected for duplicate analysis and the duplicate lab number is 2003010116–12, record in red "Dup –12" on the –1 sample container.

REFERENCES:

1. Northern Analytical Laboratories, Inc. Quality Assurance Manual

Reviewed by:

Mary Walters Log In Staff

Denise Jensen 2-28-03 Quality Assurance Coordinator

3/6/03 Laboratory Manager

n\typing\sop\loginvlpsoprev020103

SAMPLE LOG IN

TEST NOTES

NORTHERN Analytical Laboratories, Inc.

ATTACHMENT A

SAMPLE RECEIPT CHECKLIST

Dear Valued Client: This checklist documents the condition of your sample(s) as it (they) arrived at our lab. Please review it and familiarize yourself with its contents. Should you have any questions or comments, please contact us. Thank you for your use of our services.

A Client Name _____

B Project _____

C Laboratory Number(s) _____

D Checklist Completed by _____
Initials / Date

E Date/Time Received _____
Date / Time

F Received by _____

G Carrier Name _____

H Sample Type _____

	YES	NO
1. Shipping container in good condition?	____	____
2. Custody seals present on shipping container? Condition: Intact ____ Broken ____	____	____
3. Chain of custody present?	____	____
4. Chain of custody signed when relinquished and received?	____	____
5. Chain of custody agrees with sample labels?	____	____
6. Custody seals on sample bottles? Condition: Intact ____ Broken ____	____	____
7. Samples in proper container/bottle?*	____	____
8. Sample containers intact?*	____	____
9. Sufficient sample volume for indicated test?*	____	____
10. Ice/Frozen Blue Ice present in shipping container? (circle one)	____	____
container temperature 1._____ 2. _____ 3. _____ * (if <0 or>10)		
11. All samples rec'd within holding time?*	____	____
12. VOA vials have zero headspace? * (if contains >5mm headspace)	____	____
13. Trip Blank received?	____	____

	YES	NO
14. pH check performed by: _____		
15. Metals bottle(s) pH <2?	____	____
16. Nutrient bottle(s) pH <2?	____	____
17. Cyanide bottle(s) pH >12?	____	____
18. Sulfide bottle(s) pH >9?	____	____
19. TOC bottle(s) pH <2?	____	____
20. Phenolics bottle(s) pH <2?	____	____
21. Oil & grease bottle(s) pH <2? (checked by analyst)	____	____
22. EPH/DRO bottle(s) pH <2? (checked by analyst)	____	____
23. Volatiles (VOA) pH <2? (checked by analyst)	____	____
24. Semivolatiles (525) pH <2? (checked by analyst)	____	____
25. Other test types	____	____
26. Client contacted?	____	____
27. Person contacted	_____	
28. Date contacted	_____	

NOTES: **Samples may be affected when not transported at the temperature recommended by the EPA for the test you've selected. Please contact the lab if you have concerns about the temperature of your samples.**

*** Critical item - if marked "NO" contact lab manager.**

COMMENTS: _____

LABPRO SAMPLE LOG-IN SHEET

LAB NO.	CLIENT (1)	DATE REC (2)	SAMPLE TYPE (3)	PROJECT NAME (4)	REMARKS (5)	# OF SAMPLES (6)	ACCEPT (7)
2003020163	Act for E.M	2/25	PLM	Bixby		1	[illegible]
2003020164	Maxim Billings	2/26	paint	PP&I	RUSH	2	BH
2003020165	M. Blgs	2/26	Cass	PPL		13	BH
2003020166	MAFB	2/26	H2O	Lift St. Call 43		1	[illegible]
2003020167	Mt Radiator	2/26	H2O	Discharge -		6	BH
2003020168	Terracon	2/26	PCM	Rocky Mt Ethanol	Rush	2	[illegible]
2003020169	M-Blgs	2/26	Soil	Huntley Sch		2	[illegible] 2/26
2003020170	MGF Falls	2/27/03	PLM	Washington	Rush	1	[illegible]
2003020171	Land & Water	2/27/03	Eph Soil	Good Food Store		5	[illegible]
2003020172	PPL - Billings	2/27/03	Water	Pond Discharge -		1	[illegible]
2003020173	WCEC - Missoula	2/27/03	Soil	CRST Spill -		1	[illegible]
2003020174	Buffalo Rester	2/27/03	PLM	Bridger Bowl	Rush	[illegible]	[illegible]
2003020175	M - Missoula	2/27/03	Air	Msla Terminal		1	[illegible]
2003020176	WCEC - Morris MN	2/27/03	Air	TRF Holiday Station		1	[illegible]
2003020177	M Helena	2/27/03	Soil & Water	Hoovestol Diesel Spill		7	
2003020178							
2003020179							
2003020180							

ATTACHMENT B

SAMPLE FRACTION CODES

R	RAW / UNPRESERVED – Common ions, BOD, TSS
M	METALS – nitric acid preserved
N	NUTRIENTS – sulfuric acid preserved
C	CYANIDE – sodium hydroxide preserved
V	VOLATILES – VOA vials for GCMS methods 8260, 524.2, 624 HCl preserved
SV	SEMIVOLATILES – no preservative – 8270, 625, 8081, 8082, 608, 8151,
SP	SEMIVOLATILES – preserved with HCl – 525.2
US	SEMIVOLATILES – unpreserved, dechlorination agent added – 508, 515.1
UV	VOLATILES – unpreserved, dechlorination agent added – 504
P	PURGEABLES – VOA vials for GC methods VPH, BETX, GRO, TPH HCl preserved
E	EXTRACTABLES – EPH, DRO, TEH, 418.1, preserved with HCl or sulfuric
G	OIL AND GREASE – preserved with sulfuric acid
S	SOIL / SOLID WASTE/ SLUDGE
SU	SULFIDE – sodium hydroxide/zinc acetate preserved
PH	PHENOL – copper sulfate/phosphoric acid preserved
CH	METHANE – VOA vials, contain headspace, no preservative
T	TOC – phosphoric acid preservative

Saved; ndata/typing/docs/fraction codes.doc

Last update – 02/28/03 DJ

CHAIN OF CUSTODY RECORD

NORTHERN
Analytical Laboratories, Inc.

602 South 25th Street
Billings, Montana 59101
Ph: 406-254-7226 • Fax: 406-254-1389

Project or Site Name

Project Number

Sampler Name (Printed)

Contact Name

Report to (Firm or Agency)

Address

City State Zip

Phone Fax

DATE COLLECTED	TIME COLLECTED	SAMPLE LOCATION OR DESCRIPTION	COMP OR GRAB	SAMPLE MATRIX	NO. OF CONTAINERS	ANALYSIS REQUIRED							NOTES	LAB NUMBER

Relinquished by:	Date	Time	Received by:
Relinquished by:	Date	Time	Received by:
Relinquished by:	Date	Time	Received by:

Appendix D

Biological Sampling and Analysis Standard Operating Procedures

Macroinvertebrate Collection

Macroinvertebrate Analysis

Periphyton Collection and Analysis

PERIPHYTON COLLECTION AND ENUMERATION METHODS
TMDL Planning Areas, MONTANA

Periphyton Collection Methods

Periphyton samples for taxonomic identification and enumeration will be collected at each site following protocols of the EMAP Western Pilot Study (Peck et al. 2000). Samples are collected from assigned sampling points at each transect across the stream. Once the sampling point is determined, either an erosional or a depositional sample is collected, depending on whether the dominant habitat at the sampling point is flowing water (e.g., a riffle or run) or slack water (e.g., a pool). A composite sample for the reach is prepared by combining the individual transect samples as they are collected into a single plastic bottle. The volume of the composite sample is recorded on a sample collection form and on the bottle label.

Periphyton Preservation and Enumeration Methods

Shake the composite sample vigorously and, with a syringe, withdraw a 50 ml aliquot into a smaller bottle or centrifuge tube. Preserve this subsample with 2 ml of 10% formalin solution. Record the subsample volume, along with sample date and location, on the sample collection form and on the subsample label. The subsample will then be sent or delivered to the algae analyst for identification and enumeration.

For identification and enumeration of soft algae, the subsample will be shaken vigorously and an aliquot will be removed to a Palmer-Maloney Counting Cell. A minimum of 300 cells will be identified to the lowest practical taxon (usually genus) and counted at 400X following Standard Methods (APHA 1992). The percentage of living vs. dead (empty) diatoms will also be recorded at this time. If algae are too sparse to allow for counting 300 cells using the Palmer counting chamber, a Sedgwick-Rafter cell will be used instead. Counts of soft algae will be entered into the Montana Diatom Database (Access 97) and will be made available electronically for statistical evaluation.

A portion of the remainder of the subsample will be cleaned using concentrated sulfuric acid and potassium dichromate. A few drops of the cleaned subsample will be dried on a coverglass and permanently mounted in Meltmount 1.704, a high-refractive index mounting medium made by Cargille, Inc. Two permanent diatom slides will be made from each subsample. A diatom proportional count will be performed on one slide, counting a minimum of 300 cells (600 valves) at random and identifying each diatom to species. A suite of 8 diatom association metrics (Stevenson and Bahls 1999) will be calculated from each count. Diatom count data and metrics will be entered into the Montana Diatom Database (Access 97) and will be made available electronically for statistical evaluation.

The slide used for the diatom proportional count will be deposited in the Montana Diatom Collection at the University of Montana Herbarium in Missoula. The other slide will be retained by *Hannaea* in Helena.

References

American Public Health Association. 1992. Standard Methods for the Examination of Water and Wastewater, 18th Edition. A.P.H.A., Washington, D.C.

Peck, D.V., J.M. Lazorchak, and D.J. Klemm (eds.). May 2000. Environmental Monitoring and Assessment Program--Surface Waters: Western Pilot Study Field Operations Manual for

Wadeable Streams. U.S.E.P.A., Regional Ecology Branch, Western Ecology Division, National Health and Environmental Effects Research Laboratory, Corvallis, OR.

Stevenson, R.J. and L.L Bahls. 1999. Periphyton Protocols, p. 6/1-6/23 *in* Barbour, M.T., J.Gerritsen, B.D. Snyder, and J.B. Stribling (eds.), Rapid Bioassessment Protocols for Use in Streams and Wadeable Rivers: Periphyton, Benthic Macroinvertebrates and Fish, 2nd Edition. EPA 841-B-99-002.

STANDARD OPERATING PROCEDURES FOR THE COLLECTION OF A MACROINVERTEBRATE SAMPLE FROM WADABLE RIVERS AND STREAMS

Summary

Macroinvertebrates are excellent indicators of aquatic health. Additionally, due to the range of life spans and varying needs throughout their life span macroinvertebrates are excellent indicators of chronic and acute pollution impacts.

In rivers and streams which naturally contain cobble (riffle/run) habitat, a single sample collected from this habitat is considered representative of the stream reach. Many rivers and streams in the state, however, do not naturally contain cobble substrate. These rivers and streams are typically low gradient streams with sandy or silty sediments. In cases where cobble substrate represents less than 30 % of the sampling reach in reference streams (i.e., least impaired streams which represent the ecoregion or basin) the multi-habitat method for collecting macroinvertebrate samples should be used. It is important to recognize that the appropriate sampling method (single or multi-habitat) should be selected based on the habitat availability of the reference condition and not of potentially impaired streams. For example, the multi-habitat method should not be used for stream reaches where the extent of cobble substrate was reduced due to anthropogenic sediment deposition. Conversely, the single-habitat method should not be used where the stream reach contains artificially introduced rock or cobble material.

The following methods have been developed, in part, based on the Rapid Bioassessment Protocols for Use in Streams and Wadable Rivers: Periphyton, Benthic Macroinvertebrates, and Fish, Second Edition (Barbour et al. 1999).

Field Collection Procedures for Single-Habitat Macroinvertebrate Samples

Equipment list

___ D-frame net, Kick net, Surber Bottom Sampler, or Hess Bottom Sampler (500-600 µm mesh opening)
___ Waders (chest-high or hip boots)
___ Sample containers (1 and 2 liter plastic jars), Sample container labels (water proof paper)
___ 95 % Ethanol
___ Sieve bucket (500 µm mesh opening)
___ Forceps
___ Permanent magic marker (black)
___ Pencils, clipboard
___ Field Forms
___ Camera
___ Global Positioning System (GPS) Unit (optional)

Procedures

Field Collection Procedures for Multi-Habitat Macroinvertebrate Samples

Equipment list

___D-frame net
___Chest waders
___1 and 2 liter plastic jars
___10% buffered formalin
___Sieve bucket
___Forceps
___Permanent magic marker (black)
___Pencil
___Field Forms

Procedures

1. Macroinvertebrates will be collected using a D-frame aquatic net with a 454 cm^2 opening and 600 micron mesh.

2. At each site, a qualitative composite sample will be collected from stable stream habitats such as riffles, shoreline, aquatic vegetation, leaf pack, root wads, and snags. Each composite sample will consist of collecting 20 individual samples apportioned among the stable stream habitats, with a minimum of 2 samples per habitat.

3. Habitat sampling will be weighted toward the amounts of individual habitats encountered at each site. For example, if a sampling reach is composed of 10 percent riffles, 40 percent pools with vegetation, and 50 percent runs with over hanging banks, 2 samples would be collected from the riffles, 8 from the pools and 10 from the runs.

4. The 20 individual samples will be combined into a single container and preserved with a 10 percent formalin solution buffered with borax.

5. Container is labeled with permanent black magic marker. Label information includes; 1) sample number, Site number, Date, Time, and Sampler.

6. Care will be taken to ensure all the animals within the net are transferred by washing the net into the container using the preserving solution.

7. Sample container will be labeled with site identification and date using permanent black magic marker.

8. Fill out field form. Data recorded on the form are, 1) site identification, 2) time, 3) date, 4) personnel, and 5) method of collection.

9. Collect upstream down stream photo-point. After the final clean up and prior to leaving, a upstream downstream photograph is collected using either a digital or 35 millimeter camera.

10. Quality and quantity assurance is verified by revisiting at a minimum of three sites each sampling year. The re-sampling will identify the range of variance associated with the method of sampling and analysis employed. For future reference and verification a voucher collection of all species collected at each site will be preserved and archived by the the contractor.

Macroinvertebrate (IBI) Field Collection Data Log

Sample No.	Waterbody Name & Site Description	Date	Time	Collection Method	Personnel

Figure 7.19.1 Macroinvertebrate (IBI) Field Collection Data Log

STANDARD OPERATING PROCEDURE FOR LABORATORY PROCESSING OF MACROINVERTEBRATE SAMPLES

Summary

Macroinvertebrate sample processing will include washing, rinsing, sub-sampling, identification, and enumeration of aquatic Macroinvertebrates.

Procedures

1. Individual sample processing protocol for the macroinvertebrate samples will be developed by analyzing a statistically relevant subset randomly selected from the original samples. One sub-sampling will be processed as a representative of the field sample

2. The laboratory procedures begin with the removal of the preservative by rinsing each macroinvertebrate sample over a 0.5 mm screen.

3. The sample is then transferred to a standard white 30 x 40 cm flat tray with 5 x 5 cm square markings on the bottom. Enough water is added to the tray until the sample is completely dispersed and evenly distributed.

4. To begin, 3 sub-samples consisting of 100 animals will be selected from randomly selected field samples. Quadrants will be randomly selected for each sub-sampling and all organisms removed within each quadrant until the total number of organisms obtained for that sub-sampling is +/-10% of the specified sub-sampling size. When counting organisms, any animal which is lying over a line separating two quadrants is considered to be in the quadrant containing the head.

5. A determination on additional sub-sampling will be made following organism identification and enumeration. Additional sub-sampling will be performed if sample analysis yields ambiguous, spurious or unclear results. If additional sub-samples are taken, the indices are averaged with those of the original sub-sample.

6. Macroinvertebrates will be identified to the lowest practical level. The number of each group will be recorded on a laboratory data sheet. Representative specimens of each animal identified will be selected and stored separately in a voucher collection. The voucher collection of identified specimens will be maintained by the taxonomist until appropriate action is taken, as determined by U.S. EPA Region 8 and the State of Montana.

Quality assurance quality control

The laboratory QA/QC of Macroinvertebrates samples will involve;

1. Sub-sampling replicate field samples.

2. Performing replicate sub-samples on ten percent of field samples.

3. Removing and identifying all organisms from 10 percent of the field samples; and

4. Providing a voucher collection to be maintained by the the contractor until such time as appropriate action is taken, as determined by U.S. EPA Region 8 and the State of Montana.

LAB TECHNIQUES

LAB OPERATIONS OVERVIEW

Once brought back to the lab, samples will be checked in and recorded on either the River or Lake Sample Tracking Sheet. The samples will be stored until ready for sorting, counting, and identification. All sorting, identifications, and storing will take place at the subcontractor's laboratory.

A fixed count subsampling method will be used. This project will sort to approximately 500 organism subsamples. Sort residue (or sample pickate) will be saved in a separate container labeled pickate. All materials (identified sample, sort residue, and unsorted sample remains) will be retained by the contractor until directed otherwise by the State of Montana or U.S. EPA Region 8. All specimens will be identified to the lowest possible taxon, primarily genus, but species, if possible. Avoucher collection will be prepared for each site and a taxonomic reference collection for the for the project overall.

WASHING AND PREPARING SAMPLE FOR SORTING

Thoroughly rinse sample in a 500 μm-mesh sieve to remove preservative and fine sediment. Large organic material (whole leaves, twigs, algal, or macrophyte mats, etc.) not removed in the field should be rinsed, visually inspected, and discarded. If the samples have been preserved in alcohol, it will be necessary to soak the sample contents in water for about 15 minutes to hydrate the benthic organisms, which will prevent them from floating on the water surface during sorting. If the sample was stored in more than one container, the contents of all containers for a given sample should be combined at this time. Gently mix the sample by hand while rinsing to make homogeneous.

After washing, spread the sample evenly across a pan marked with numbered grids approximately 6 cm × 6 cm. Along the sides and top of the gridded pan, line up numbered jars, which will hold the sorted organisms. It has been our experience that you should start with jars one to fifteen set up and have jars sixteen to thirty available if needed. If the sample is to be identified that day, these jars can contain water. If it is towards the end of the day and they will not be identified in the next twelve hours the jars should contain 70 percent ETOH.

SAMPLE SORTING AND COUNTING

Using a deck of cards that contains numbers corresponding to the grids in the pan, draw a card to select a grid within the gridded pan. This is done to make sure a random sampling is carried out. Begin picking organisms from that square and placing them in labeled sample vials or other containers. Any organism that is lying over a line separating two grids is considered to be on the grid containing its head. In those instances where it may not be possible to determine the location of the head (worms for instance), the organism is considered to be in the grid containing most of its body When all organisms have been removed from the selected grid, draw another card and remove all the organisms from that grid in the same manner. Continue this process of drawing cards and picking grids. The sorter should monitor the total number of organisms being removed from each grid. As the total number approaches the target number (500), the sorter should be careful to remove all organisms from the final grid even

if 500 is attained after only partial completion. Note on the bench data sheet how many grids were picked to get the final count. Each sample should result in three ?types? of samples: 1) the sample to be sent to the taxonomist, 2) sort residue, or pickate, and 3) unsorted sample remains. All containers should have the same information as the original sample container, and labelled as to which type of sample it is.

After laboratory processing is complete for a given sample, all sieves, pans, trays, etc., that have come in contact with the sample will be rinsed thoroughly, examined carefully, and picked free of organisms or debris; organisms found will be added to the sample residue.

SAMPLE IDENTIFICATION

All specimens will be identified to genus level; where it is not possible to do so, reasons will be noted (e. g., early instars, juvenile or damaged specimens) and more coarse level nomenclature applied, such as tribe, family, or order.

Record the identity and number of organisms on the Lab Data Sheet. Also, record the life stage of the organisms and the taxonomist's initials. After each taxon is identified, the organisms will be placed in a container labeled with the site number, location, and date. This container, along with any slides, constitute the voucher collection for that site. After the sample has been identified, properly labeled, and placed in 70 percent ETOH it will be cataloged and held by the taxonomist until appropriate action is taken, as determined by the U.S. EPA Region 8 and the State of Montana.

SLIDE PREPARATION

Midge (Chironomidae) larvae and pupae will be mounted on slides in an appropriate medium (e.g., Euperal, CMC-10); slides will be labeled with the site identifier, date collected, and the first initial and last name of the collector. As with midges, worms (Oligochaeta) must also be mounted on slides and should be appropriately labeled.

REFERENCE COLLECTION AND SAMPLE VOUCHERS

A reference collection will be developed for the overall project that includes at least one specimen for each taxon identified, from all sites and samples. Each taxon will be represented by at least one specimen in a labeled vial filled with 75% ethanol, or mounted on a slide in the appropriate medium (CMC-9 or 10, or Euperal). A voucher sample will be prepared for each site that includes all specimens identified from a subsample (excluding those that are slide mounted or removed for the reference collection).

REFERENCES USED TO PREPARE THIS SECTION

Barbour, M.T., and J. Gerritsen. 1996. Subsampling of benthic samples: A defense of the fixed-count method. *Journal of North American Benthological Society* 15 (3): 386-391.

Barbour, M.T., Gerritsen, J., Snyder, B.D., and J.B. Stribling. 1999. *Rapid Bioassessment Protocols for Use in Wadeable Streams and Rivers: Periphyton, Benthic Macroinvertebrates, and Fish (second edition).* EPA 841-B-99-002. U.S. Environmental Protection Agency, Washington D.C.

Gibson, G.R., M.T. Barbour, J.B. Stribling, J. Gerritsen, and J.R. Karr. 1996. *Biological criteria: Technical guidance for streams and small rivers (revised edition).* U.S. Environmental Protection Agency, Office of Water, Washington D.C. EPA 822-B-96-001.

Lazorchak, J.M., Klemm, D.J., and D.V. Peck (editors). 1998. *Environmental Monitoring and Assessment Program ? Surface Waters: Field Operations and Methods for Measuring the Ecological Condition of Wadeable Streams.* EPA/620/R-94/004F. U.S. Environmental Protection Agency, Washington D.C.

Merritt, R.W. and Cummins, K.W., 1996. Introduction to the Aquatic Insects of North America, Third Edition. Kendal/Hunt Publishing Company, Dubuque, IA.

Moulton II, S.R., Carter, J.L., Grotheer, S.A., Cuffney, T.F., and T.M. Short. 2000. *Methods of Analysis by the U.S. Geological Survey National Water Quality Laboratory ? Processing, Taxonomy, and Quality Control of Benthic Macroinvertebrate Samples.* 00-212. U.S. Geological Society.

North Dakota Department of Health. 1996. *North Dakota Rapid Bioassessment Protocol ? Benthic Macroinvertebrates (1995-1996 Proposed Workplan).* North Dakota Department of Health.